Western Digital.



Hard disk drive specifications

Ultrastar® DC HC670

3.5-inch Serial ATA hard disk drive

Model: WSH722626ALE600/1/4
WSH722626ALN600/1/4
WSH722626ALE6L0/1/4
WSH722626ALN6L0/1/4
WSH722625ALE604

Revision 1.1

19 January 2023

Publication Disclaimer Information

Western Digital Technologies, Inc. or its affiliates' (collectively "Western Digital") general policy does not recommend the use of its products in life support applications where in a failure or malfunction of the product may directly threaten life or injury. Per Western Digital Terms and Conditions of Sale, the user of Western Digital products in life support applications assumes all risk of such use and indemnifies Western Digital against all damages. This document is for information use only and is subject to change without prior notice. Western Digital assumes no responsibility for any errors that may appear in this document, nor for incidental or consequential damages resulting from the furnishing, performance or use of this material.

Absent a written agreement signed by Western Digital or its authorized representative to the contrary, Western Digital explicitly disclaims any express and implied warranties and indemnities of any kind that may, or could, be associated with this document and related material, and any user of this document or related material agrees to such disclaimer as a precondition to receipt and usage hereof.

Each user of this document or any product referred to herein expressly waives all guaranties and warranties of any kind associated with this document any related materials or such product, whether expressed or implied, including without limitation, any implied warranty of merchantability or fitness for a particular purpose or non-infringement. Each user of this document or any product referred to herein also expressly agrees Western Digital shall not be liable for any incidental, punitive, indirect, special, or consequential damages, including without limitation physical injury or death, property damage, lost data, loss of profits or costs of procurement of substitute goods, technology, or services, arising out of or related to this document, any related materials or any product referred to herein, regardless of whether such damages are based on tort, warranty, contract, or any other legal theory, even if advised of this possibility of such damages.

This document and its contents, including diagrams, schematics, methodology, work product, and intellectual property rights described in, associated with, or implied, by this document, are the sole and exclusive property of Western Digital. No intellectual property license, express or implied, is granted by Western Digital associated with the document recipient's receipt, access and/or use of this document or the products referred to herein; Western Digital retains all rights hereto.

Western Digital, the Western Digital design, the Western Digital logo, iNAND, OptiNAND, and Ultrastar are registered trademarks or trademarks of Western Digital Corporation or its affiliates in the US and/or other countries. All other marks are the property of their respective owners.

© 2023 Western Digital Corporation or its affiliates. All rights reserved.

References in this publication to Western Digital-branded products, programs, or services do not imply that they will be made available in all countries. Product specifications provided are sample specifications and do not constitute a warranty. Actual specifications for unique part numbers may vary. Please visit the Support section of our website, westerndigital.com/support*, for additional information on product specifications. Pictures shown may vary from actual products.*

Table of contents

1 General 18
1.1 Introduction 18
1.2 Glossary 20
1.3 General caution 20
1.4 References 20
2 General features 21
Part 1. Functional specification 22
3 Fixed disk subsystem description 23
3.1 Control Electronics 23
3.2 Head disk assembly 23
3.3 Actuator 23
4 Drive characteristics 24
4.1 Default logical drive parameters 24
4.2 Data sheet 25
4.3 Worldwide Name Assignment 25
4.4 Drive organization 25
4.4.1 Drive Format 25
4.4.2 Cylinder allocation 25
4.4.3 Zone Layout 26
4.5 Performance characteristics 27
4.5.1 Mechanical positioning 27
4.5.2 Drive ready time 27
4.5.3 Operating modes 28
5 Defect flagging strategy 29
5.1 Shipped format 29
6 Specification 30
6.1 Electrical interface 30
6.1.1 Connector location 30
6.1.2 Signal definition 31
6.1.3 Out of band signaling 32
6.2 Environment 33
6.2.1 Temperature and humidity 33
6.2.2 Storage Requirements 34
6.2.3 Corrosion test 34
6.2.4 Atmospheric condition 34
6.3 DC power requirements 35
6.3.1 Input voltage 35
6.3.2 Power supply current 36
6.3.3 Power line noise limits 38
6.3.4 Power Consumption Efficiency 38
6.4 Workload 38
6.4.1 Workload 38
6.5 Reliability 39
6.5.1 Annualized failure rate 39
6.5.2 Data integrity 39
6.5.3 Cable noise interference 39
6.5.4 Load/Unload 39
6.5.5 Start/stop cycles 39
6.5.6 Preventive maintenance 39
6.5.7 Data reliability 39
6.5.8 Required Power-Off Sequence 40

6.6 Mechanical specifications 41
6.6.1 Physical dimensions 41
6.6.2 Connector locations 43
6.6.3 Drive mounting 43
6.6.4 Heads unload and actuator lock 43
6.7 Vibration and shock 44
6.7.1 Operating vibration 44
6.7.2 Nonoperating vibration 44
6.7.3 Operating shock 45
6.7.4 Nonoperating shock 45
6.7.5 Nonoperating Rotational shock 45
6.8 Acoustics 46
6.9 Identification labels 46
6.10 Safety 47
6.10.1 UL and CSA standard conformity 47
6.10.2 EU Safety standard conformity 47
6.10.3 Flammability 47
6.10.4 Safe handling 47
6.10.5 Substance restriction requirements 47
6.10.6 Secondary circuit protection 47
6.11 Electromagnetic compatibility 48
6.11.1 CE Mark 48
6.11.2 RCM Mark 48
6.11.3 BSMI Mark 48
6.11.4 KC Mark 48
6.12 Third Party Open-Source Licenses 49
Part 2. Interface specification 51
7 General 52
7.1 Introduction 52
7.2 Terminology 52
7.3 Deviations From Standard 52
8 Registers 53
8.1 Alternate Status Register 53
8.2 Command register 53
8.3 Cylinder High Register 53
8.4 Cylinder Low Register 54
8.5 Device Control Register 54
8.6 Device/Head Register 55
8.7 Error Register 55
8.8 Features Register 56
8.9 Sector Count Register 56
8.10 Sector Number Register 56
8.11 Status Register 57
9 Normal and Error Output Field Descriptions 58
9.1 Overview 58
9.2 Status Field 58
9.2.1 Overview 58
9.2.2 ALIGNMENT ERROR bit 58
9.2.3 BUSY bit 59
9.2.4 DATA REQUEST bit 59
9.2.5 DEVICE FAULT bit 59
9.2.6 DEVICE READY bit 59
9.2.7 ERROR bit 59
9.2.8 SENSE DATA AVAILABLE bit 59

9.2.9 Transport Dependent bits and fields 59
9.3 ERROR Field 60
9.3.1 Overview 60
9.3.2 ABORT bit 60
9.3.3 ID NOT FOUND bit 61
9.3.4 ILLEGAL LENGTH INDICATOR bit 61
9.3.5 INTERFACE CRC bit 61
9.3.6 UNCORRECTABLE ERROR bit 61
9.4 COUNT Field 62
9.5 SACTIVE Field 62
9.6 SATA STATUS Field 62
9.7 LBA Field 62
9.7.1 LBA of First Unrecoverable Error 62
9.8 Sense Code Definition 62
9.9 Device Signatures for Normal Output 63
10 General Operation Descriptions 64
10.1 Reset Response 64
10.1.1 Register Initialization 65
10.2 Diagnostic and Reset Considerations 66
10.3 Power Management Feature Set 66
10.3.1 Power Mode 66
10.3.2 Power Management Commands 67
10.3.3 Standby Timer 67
10.3.4 Interface Capability for Power Modes 67
10.4 SMART Feature Set 68
10.4.1 Attributes 68
10.4.2 Attribute Values 68
10.4.3 Attribute Thresholds 68
10.4.4 Threshold Exceeded Condition 68
10.4.5 SMART Feature Set Commands 68
10.4.6 Off-line Read Scanning 68
10.4.7 Error Log 69
10.4.8 Self-Test 69
10.5 Security Feature Set 70
10.5.1 Security Mode 70
10.5.2 Security Level 70
10.5.3 Password 70
10.5.4 Operation Example 71
10.5.5 Command Table 74
10.6 Host Protected Area Feature Set 77
10.6.1 Example for operation (In LBA mode) 77
10.6.2 Security Extensions 78
10.7 Write Cache Function 79
10.8 Reassign Function 79
10.8.1 Auto Reassign Function 79
10.9 Power-up in Standby Feature Set 80
10.10 Advanced Power Management Feature Set (APM) 80
10.11 48-bit Address Feature Set 80
10.12 SATA BIST (Built-in Self Test) 81
10.13 SATA Interface Power Management 81
10.14 Software Setting Preservation 81
10.14.1 COMRESET Preservation Requirements 81
10.15 Serial ATA Optional Features 83
10.15.1 Asynchronous Signal Recovery 83

10.15.2 Device Power Connector Pin 11 Definition 83
10.15.3 Phy Event Counters 83
10.15.4 NCQ Non-Data (63h) 84
10.16 Rebuild Assist Feature Set 86
10.16.1 Enabling the Rebuild Assist Feature 86
10.16.2 Using the Rebuild Assist Feature Overview 86
10.16.3 Disabling the Rebuild Assist Feature 86
10.17 SCT Command Transport Feature Set 87
10.17.1 Overview 87
10.17.2 SCT Command Protocol 88
10.17.3 SCT Command Set 97
10.18 Extended Power Conditions (EPC) Feature Set 105
10.18.1 Power Conditions 105
10.18.2 Power Condition Timers 106
10.18.3 Interaction with Resets, Commands and Other Features 106
10.19 Sanitize Device Feature Set 107
10.19.1 Overview 107
10.19.2 Sanitize Device Feature 108
10.19.3 Sanitize Device State Machine 109
10.20 Trusted Computing Group Feature Set 112
10.20.1 Referenced Specifications and Standards 112
10.20.2 Implementation Exceptions 113
10.20.3 Implementation Features and Details Outside of TCG Specifications 113
10.20.4 Encryption Algorithms 114
10.20.5 TCG Enterprise SSC Tables 115
10.20.6 Firmware Download and Signing 117
10.20.7 Ports 118
10.20.8 MSID 121
10.20.9 Logging 121
10.20.10 Number of Sessions 121
10.20.11 Number of Bands 121
10.20.12 Number of COMIDs 121
10.20.13 PSID 121
10.20.14 Locked and Unlocked Behavior 122
10.20.15 Error Codes 127
10.20.16 Life Cycle Model 127
10.20.17 Customer Specific Requirements 127
10.20.18 Switching between TCG Enterprise and ISE-mode 128
10.20.19 Block SID Authentication 128
10.21 Zone Device Feature Set 129
10.21.1 Overview 129
10.21.2 Host Managed Zones Feature Set 129
10.21.3 Zone Attributes 130
10.21.4 Zone Types 133
10.21.5 Additional Feature Set Interactions 149
10.22 Storage Element Depopulation Feature Set 156
10.22.1 Overview 156
10.22.2 Status Change Notification 156
10.22.3 Repurposing Depopulation 156
10.22.4 Repurposing Depopulation Restoration 158
10.22.5 Interactions with Logs 159
10.22.6 Interactions with Caches 159
11 Command Protocol 160
11.1 PIO Data In Commands 160

11.2 PIO Data Out Commands 161
11.3 Non-Data commands 162
11.4 DMA Data In Commands and DMA Data Out Commands 164
11.5 First-party DMA commands 165
12 Command Descriptions 166
12.1 Check Power Mode (E5h/98h) 171
12.2 Close Zone Ext (9Fh/01h) 173
12.2.1 ALL bit 173
12.2.2 ZONE COUNT field 173
12.2.3 ZONE ID field 173
12.2.4 Close Zone Ext command processing 174
12.3 Configure Stream (51h) 175
12.4 Device Configuration Overlay (B1h) 176
12.4.1 Device Configuration Restore (Subcommand C0h) 176
12.4.2 Device Configuration Freeze Lock (Subcommand C1h) 176
12.4.3 Device Configuration Identify (Subcommand C2h) 177
12.4.4 Device Configuration Set (Subcommand C3h) 177
12.5 Download Microcode (92h) 180
12.5.1 Overview 181
12.5.2 Sector Number / Sector Count 181
12.5.3 Download with offsets and save microcode 181
12.5.4 Download with offsets and save microcode for future use 181
12.5.5 Activate downloaded microcode 181
12.5.6 Error Outputs 181
12.6 Download Microcode DMA (93h) 182
12.6.1 Overview 183
12.6.2 Sector Count / Sector Number 183
12.6.3 Download with offsets and save microcode 183
12.6.4 Download with offsets and save microcode for future use 183
12.6.5 Activate downloaded microcode 183
12.6.6 Error Outputs 183
12.7 Execute Device Diagnostic (90h) 184
12.8 Finish Zone Ext (9Fh/02h) 185
12.8.1 FINISH ALL bit 185
12.8.2 ZONE COUNT field 185
12.8.3 ZONE ID field 185
12.8.4 Finish Zone Ext command processing 185
12.9 Flush Cache (E7h) 187
12.10 Flush Cache Ext (EAh) 189
12.11 Format Unit (F7h) 191
12.12 Get Physical Element Status – (12h, DMA) 193
12.12.1 Feature Set 193
12.12.2 Description 193
12.12.3 Inputs 193
12.12.4 Normal Outputs 195
12.12.5 Error Outputs 195
12.12.6 Input from the Device to the Host Data Structure 196
12.13 Identify Device (ECh) 199
12.14 Idle (E3h/97h) 209
12.15 Idle Immediate (E1h/95h) 211
12.16 Initialize Device Parameters (91h) 212
12.17 NCQ Non-Data (63h) 213
12.17.1 Abort NCQ Queue Subcommand (0h) 214
12.17.2 Deadline handling Subcommand (1h) 216

12.17.3 Set Features Subcommand (5h) 218
12.18 NOP (00h) 220
12.19 Open Zone Ext (9Fh/03h) 221
12.19.1 ALL bit 221
12.19.2 ZONE COUNT field 221
12.19.3 ZONE ID field 221
12.19.4 Open Zone Ext command processing 221
12.20 Read Buffer (E4h) 223
12.21 Read Buffer DMA (E9h) 224
12.22 Read DMA(C8h/C9h) 225
12.23 Read DMA Ext (25h) 227
12.24 Read FPDMA Queued (60h) 229
12.25 Read Log Ext (2Fh) 231
12.25.1 General Purpose Log Directory (log page 00h) 233
12.25.2 Extended Comprehensive SMART Error log (log page 03h) 234
12.25.3 Device Statistics log (log page 04h) 237
12.25.4 Extended SMART Self-test log (log page 07h) 248
12.25.5 Power Conditions log (log page 08h) 249
12.25.6 Pending Defects Log (log page 0Ch) 251
12.25.7 NCQ Command Error log (log page 10h) 253
12.25.8 Phy Event Counters log (log page 11h) 254
12.25.9 NCQ Non-Data log (log page 12h) 257
12.25.10 NCQ Send and Receive log (log page 13h) 258
12.25.11 Rebuild Assist log (log page 15h) 260
12.25.12 Write Stream Error log (log page 21h) 260
12.25.13 Read Stream Error log (log page 22h) 261
12.25.14 Current Device Internal Status Data log (log page 24h) 262
12.25.15 Saved Device Internal Status Data log (log page 25h) 264
12.25.16 Sector Configuration log (log page 2Fh) 266
12.25.17 Identify Device Data log (log page 30h) 267
12.25.18 NAND Information log (log page D9h : Vendor Specific) 280
12.26 Read Log DMA Ext (47h) 281
12.27 Read Multiple (C4h) 282
12.28 Read Multiple Ext (29h) 283
12.29 Read Native Max Address (F8h) 284
12.30 Read Native Max Address Ext (27h) 285
12.31 Read Sector(s) (20h/21h) 286
12.32 Read Sector(s) Ext (24h) 287
12.33 Read Stream DMA Ext (2Ah) 288
12.34 Read Stream Ext (2Bh) 291
12.35 Read Verify Sector(s) (40h/41h) 294
12.36 Read Verify Sector(s) Ext (42h) 295
12.37 Recalibrate (1xh) 296
12.38 Receive FPDMA Queued (65h) 297
12.38.1 READ LOG DMA EXT (1h) 298
12.39 Remove Element And Truncate - (7Ch) 300
12.39.1 Feature Set 300
12.39.2 Description 300
12.39.3 Inputs 300
12.40 Report Zones Ext (4Ah/0h) 303
12.40.1 PARTIAL bit 303
12.40.2 REPORTING OPTIONS field 303
12.40.3 ZONE LOCATOR field 304
12.40.4 Input From the Device to the Host Data Structure 304

12.41 Request Sense Data Ext (0Bh) 308
12.42 Reset Write Pointer Ext (9Fh/04h) 310
12.43 Restore Elements and Rebuild (7Dh) 312
12.43.1 Feature Set 312
12.43.2 Description 312
12.43.3 Inputs 312
12.44 Sanitize Device Feature Set (B4h) 315
12.44.1 Sanitize Status Ext Command (feature: 0000h) 315
12.44.2 Crypto Scramble Ext Command (feature: 0011h) (data encryption model only) 316
12.44.3 Overwrite Ext Command (feature: 0014h) 320
12.44.4 Sanitize Freeze Lock Ext Command (feature: 0020h) 321
12.44.5 Sanitize Antifreeze Lock Ext Command (feature: 0040h) 322
12.45 Security Disable Password (F6h) 323
12.46 Security Erase Prepare (F3h) 324
12.47 Security Erase Unit (F4h) 325
12.48 Security Freeze Lock (F5h) 327
12.49 Security Set Password (F1h) 328
12.50 Security Unlock (F2h) 330
12.51 Seek (7xh) 331
12.52 Send FPDMA Queued (64h) 332
12.53 Sense Condition (F0h : Vendor specific) 333
12.54 Set Date & Time Ext (77h) 334
12.55 Set Features (EFh) 335
12.55.1 Write Cache (02h) 336
12.55.2 Set Transfer Mode (03h) 336
12.55.3 Advanced Power Management (05h) 336
12.55.4 Serial ATA Feature (10h) 337
12.55.5 Set Maximum Host Interface Sector Time (43h) 337
12.55.6 Zone Activation Control subcommand (46h) 338
12.55.7 Zoned URSWRZ-bit Modification subcommand (47h) 338
12.55.8 Extended Power Conditions (EPC) (4Ah) 339
12.55.9 Repurposing Depopulation Feature (5Bh : Vendor Specific) 347
12.55.10 Write Cache Enabled Data Safety (5Ch : Vendor Specific) 347
12.55.11 Enable/Disable the Sense Data Reporting (C3h) 347
12.55.12 Execute RDP Certification for SATA (E0h : Vendor Specific) 347
12.56 Set Max Address (F9h) 348
12.56.1 Set Max Set Password (Feature = 01h) 350
12.56.2 Set Max Lock (Feature = 02h) 351
12.56.3 Set Max Unlock (Feature = 03h) 352
12.56.4 Set Max Freeze Lock (Feature = 04h) 353
12.57 Set Max Address Ext (37h) 354
12.58 Set Multiple Mode (C6h) 356
12.59 Set Sector Configuration Ext (B2h) 357
12.60 Sleep (E6h/99h) 358
12.61 SMART Function Set (B0h) 359
12.61.1 SMART Subcommand 359
12.61.2 Device Attributes Data Structure 369
12.61.3 Device Attribute Thresholds Data Structure 374
12.62 Standby (E2h/96h) 380
12.63 Standby Immediate (E0h/94h) 381
12.64 Trusted Receive (5Ch) 382
12.65 Trusted Receive DMA (5Dh) 383
12.66 Trusted Send (5Eh) 384
12.67 Trusted Send DMA (5Fh) 385

12.68 Write Buffer (E8h) ... 386
12.69 Write Buffer DMA (EBh) ... 387
12.70 Write DMA (CAh/CBh) ... 388
12.71 Write DMA FUA Ext (3Dh) ... 389
12.72 Write DMA Ext (35h) ... 391
12.73 Write FPDMA Queued (61h) ... 392
12.74 Write Log Ext (3Fh) ... 394
12.75 Write Log DMA Ext (57h) ... 396
12.76 Write Multiple (C5h) ... 397
12.77 Write Multiple Ext (39h) ... 398
12.78 Write Multiple FUA Ext (CEh) ... 399
12.79 Write Sector(s) (30h/31h) ... 400
12.80 Write Sector(s) Ext (34h) ... 401
12.81 Write Stream DMA Ext (3Ah) ... 402
12.82 Write Stream Ext (3Bh) ... 405
12.83 Write Uncorrectable Ext (45h) ... 408
12.84 Zone Activate Ext (4Ah/08h) ... 409
12.84.1 OTHER ZONE DOMAIN ID field ... 410
12.84.2 ALL bit ... 410
12.84.3 NOZSRC field ... 410
12.84.4 RETURN PAGE COUNT field ... 410
12.84.5 AUXNOZ field ... 410
12.84.6 Input From the Device to the Host Data Structure ... 411
12.84.7 Selecting the candidate zones to activate and deactivate ... 417
12.84.8 Prerequisites reported by sense codes ... 417
12.84.9 Prerequisites reported in the Zone Activation Results Header ... 418
12.84.10 Zone Activation processing ... 419
12.85 Zone Query Ext (4Ah/09h) ... 420
12.85.1 OTHER ZONE DOMAIN ID field ... 420
12.85.2 ALL bit ... 420
12.85.3 NOZSRC field ... 420
12.85.4 RETURN PAGE COUNT field ... 420
12.85.5 AUXNOZ field ... 421
12.85.6 Input From the Device to the Host Data Structure ... 421
12.85.7 Selecting the candidate zones to activate and deactivate ... 421
12.85.8 Prerequisites reported by sense codes ... 421
12.85.9 Prerequisites reported in the Zone Activation Results Header ... 421
13 Appendix. Sense key and Additional Sense code list ... 422

List of tables

Table 1 Type and Model# 18
Table 2 Formatted capacity 24
Table 3 Data sheet 25
Table 4 World Wide Name Assignment 25
Table 5 Zone Layout 26
Table 6 Latency Time 27
Table 7 Drive ready time 27
Table 8 Mode transition times 28
Table 9 Interface connector pins and I/O signals 31
Table 10 Parameter descriptions 32
Table 11 Temperature and humidity 33
Table 12 Input voltage 35
Table 13 SATA power consumption 36
Table 14 Allowable power supply noise limits at drive power connector 38
Table 15 Power consumption efficiency 38
Table 16 Physical Dimensions 42
Table 17 Random vibration PSD profile break points (operating) 44
Table 18 Random vibration (Rotational) PSD profile break points 44
Table 19 Random vibration PSD profile break points (nonoperating) 44
Table 20 Sinusoidal shock wave 45
Table 21 Rotational Shock 45
Table 22 Sound power levels 46
Table 23 Alternate Status Register 53
Table 24 Device Control Register 54
Table 25 Device/Head Register 55
Table 26 Error Register 55
Table 27 Status Register 57
Table 28 STATUS field 58
Table 29 ERROR field 60
Table 30 Device Signatures for Normal Output 63
Table 31 Device signatures for COUNT and LBA field 63
Table 32 Reset Response 64
Table 33 Default Register Values 65
Table 34 Diagnostic Codes 65
Table 35 Power conditions 67
Table 36 Command table for device lock operation 74
Table 37 NCQ Non-Data – Command definition 84
Table 38 Subcommand Field 84
Table 39 SCT Log Page and direction 87
Table 40 Identify Device Information Word 206 87
Table 41 Output Registers of SCT Command Using SMART 88
Table 42 Input Registers of SCT Command Using SMART 89
Table 43 Output Registers of SCT Command Using Write Log Ext 90
Table 44 Input Registers of SCT Command Using Write Log Ext 90
Table 45 Key Sector Format 91
Table 46 SCT Action Code List 91
Table 47 Extended Status Code 92
Table 48 Input Registers of SCT Data Transfer Using SMART 93
Table 49 Input Registers of SCT Data Transfer using Read/Write Log Ext 93
Table 50 Input Registers of SCT Status Request Using SMART 94
Table 51 Input Registers of SCT Status Request Using Read Log Ext 94

Table 52 Data Format of SCT Status Response 95
Table 53 SMART STATUS field 96
Table 54 SCT Write Same (Inputs) 97
Table 55 SCT Write Same (Outputs) 97
Table 56 Error Recovery Control command (Inputs) 99
Table 57 Error Recovery Control command (Outputs) 99
Table 58 Feature Control command (Inputs) 100
Table 59 Feature Control command (Outputs) 100
Table 60 Feature Code List 101
Table 61 SCT Data Table command (Inputs) 102
Table 62 SCT Data Table command (Outputs) 102
Table 63 Table ID 102
Table 64 Data Format of HDA Absolute Temperature History Table 103
Table 65 Extended Power Conditions Subcommands 105
Table 66 Power Condition IDs 105
Table 67 Vendor Specific Data for Level 0 Discovery 114
Table 68 Western Digital Default Values for 'Admin SP' C_PIN & 'Locking SP' C_PIN 115
Table 69 Western Digital Implementation of K_AES_256 Table 115
Table 70 Western Digital Implementation of 'Locking SP' Access Control Table 116
Table 71 Western Digital Implementation of 'Locking Info' Table 116
Table 72 Western Digital Implementation of 'Locking SP' Locking Table 117
Table 73 Ports Functionality 118
Table 74 Ports Table 118
Table 75 Modified 'Admin SP' ACE Table 119
Table 76 Modified 'Admin SP' Access Control Table 120
Table 77 Command table for TCG Enterprise device lock operation 122
Table 78 TCG Enterprise SSC Commands Behavior -1 125
Table 79 TCG Enterprise SSC Commands Behavior -2 125
Table 80 TCG Enterprise SSC Commands Behavior -3 125
Table 81 TCG Enterprise SSC Commands Behavior -4 126
Table 82 TCG Enterprise SSC Commands Behavior -5 126
Table 83 TCG Enterprise SSC Commands Behavior -6 126
Table 84 Summary of zone attributes 130
Table 85 Zone Type zone attribute 131
Table 86 Relationships between Zone Attributes 131
Table 87 Zone Condition zone attribute 131
Table 88 Zone Condition state machine functions 139
Table 89 Characteristics and attributes associated with zone state 140
Table 90 ZAC OPTIONS Field 153
Table 91 ZONE POST PROCESSING field 154
Table 92 Command Set 166
Table 93 Command Set (Subcommand) 169
Table 94 Check Power Mode Command (E5h/98h) 171
Table 95 Close Zone Ext Command (9Fh/01h) 173
Table 96 Close Zone Ext command processing 174
Table 97 Configure Stream Command (51h) 175
Table 98 Device Configuration Overlay Command (B1h) 176
Table 99 Device Configuration Overlay Features register values 176
Table 100 Device Configuration Overlay Data structure 178
Table 101 DCO error information definition 179
Table 102 Download Microcode Command (92h) 180
Table 103 Download Microcode DMA Command (93h) 182
Table 104 Execute Device Diagnostic Command (90h) 184
Table 105 Finish Zone Ext Command (9Fh/02h) 185

Table 106 Finish Zone Ext command processing 186
Table 107 Flush Cache Command (E7h) 187
Table 108 Flush Cache Ext Command (EAh) 189
Table 109 Format Unit Command (F7h) 191
Table 110 GET PHYSICAL ELEMENT STATUS command inputs 193
Table 111 FILTER field 193
Table 112 REPORT TYPE field 194
Table 113 Generic Normal Output (No LBA Return Value) for Normal Output 195
Table 114 GET PHYSICAL ELEMENT STATUS input from device to host 196
Table 115 Physical element status descriptor 197
Table 116 PHYSICAL ELEMENT TYPE field 197
Table 117 PHYSICAL ELEMENT HEALTH field 198
Table 118 Identify Device Command (ECh) 199
Table 119 Identify device information 199
Table 120 Idle Command (E3h/97h) 209
Table 121 Idle Immediate Command (E1h/95h) 211
Table 122 Initialize Device Parameters Command (91h) 212
Table 123 NCQ Non-Data command (63h) 213
Table 124 Abort NCQ Queue Subcommand (0h) 214
Table 125 Abort Type Field 215
Table 126 Deadline handling Subcommand (1h) 216
Table 127 SET FEATURES Subcommand (5h) 218
Table 128 NOP Command (00h) 220
Table 129 NOP Subcommand Code 220
Table 130 Open Zone Ext Command (9Fh/03h) 221
Table 131 Open Zone Ext command processing 222
Table 132 Read Buffer Command (E4h) 223
Table 133 Read Buffer DMA Command (E9h) 224
Table 134 Read DMA Command (C8h/C9h) 225
Table 135 Read DMA Ext Command (25h) 227
Table 136 Read FPDMA Queued Command (60h) 229
Table 137 Read Log Ext Command (2Fh) 231
Table 138 Log Address Definition 232
Table 139 General Purpose Log Directory 233
Table 140 Extended Comprehensive SMART Error Log 234
Table 141 Extended Error log data structure 235
Table 142 Command data structure 235
Table 143 Error data structure 236
Table 144 Defined Device Statistics log pages 237
Table 145 List of supported Device Statistics log pages 237
Table 146 General Statistics 238
Table 147 Rotating Media Statistics 239
Table 148 General Error Statistics 240
Table 149 Temperature Statistics (part 1 of 2) 241
Table 150 Temperature Statistics (part 2 of 2) 242
Table 151 Transport Statistics 243
Table 152 Zoned Device Statistics 244
Table 153 Extended Self-test log data structure 248
Table 154 Extended Self-test log descriptor entry 249
Table 155 Idle power conditions 249
Table 156 Standby power conditions (log page 01h) 249
Table 157 Power Conditions log descriptor 250
Table 158 Pending Defects log (page 0) 252
Table 159 Pending Defects log (page 1..n) 252

Table 160 Pending Defects descriptor format 252
Table 161 Command Error log 253
Table 162 READ LOG EXT Log Page 11h data structure definition 254
Table 163 Phy Event Counter Identifiers 255
Table 164 NCQ Non-Data Log (12h) data structure definition 257
Table 165 SATA NCQ Send and Receive log (log page 00h) 259
Table 166 Rebuild Assist log (15h) data structure definition 260
Table 167 Write Stream Error Log 261
Table 168 Read Stream Error Log 261
Table 169 Stream Error Log entry 262
Table 170 Current Device Internal Status Data header (page 0) 263
Table 171 Current Device Internal Status Data header (pages 1..n) 264
Table 172 Saved Device Internal Status Data header (page 0) 265
Table 173 Saved Device Internal Status Data (pages 1..n) 265
Table 174 Sector Configuration log 266
Table 175 Sector Configuration descriptor 266
Table 176 Identify Device Data Log 267
Table 177 List of supported IDENTIFY DEVICE data pages 267
Table 178 Capacity log page 268
Table 179 Supported Capabilities log page 269
Table 180 Current Settings log page 273
Table 181 Strings log page 274
Table 182 Security log page 275
Table 183 Serial ATA log page 276
Table 184 Zoned Device Information log page 278
Table 185 NAND Information log 280
Table 186 Read Log DMA Ext Command (47h) 281
Table 187 Read Multiple Commands (C4h) 282
Table 188 Read Multiple Ext Command (29h) 283
Table 189 Read Native Max ADDRESS (F8h) 284
Table 190 Read Native Max Address Ext (27h) 285
Table 191 Read Sector(s) Command (20h/21h) 286
Table 192 Read Sector(s) Ext Command (24h) 287
Table 193 Read Stream DMA Ext Command (2Ah) 288
Table 194 Read Stream Ext Command (2Bh) 291
Table 195 Read Verify Sector(s) Command (40h/41h) 294
Table 196 Read Verify Sector(s) Ext Command (42h) 295
Table 197 Recalibrate Command (1xh) 296
Table 198 RECEIVE FPDMA QUEUED command (65h) 297
Table 199 RECEIVE FPDMA QUEUED Subcommand Field 297
Table 200 READ LOG DMA EXT Subcommand (1h) 298
Table 201 REMOVE ELEMENT AND TRUNCATE command inputs 300
Table 202 Generic Normal Output (No LBA Return Value) for Normal Output 301
Table 203 Reset Write Pointer Ext Command (9Fh/04h) 303
Table 204 REPORTING OPTIONS field 303
Table 205 Report Zones Ext input from device to host 304
Table 206 SAME field 305
Table 207 Zone descriptor format 306
Table 208 ZONE TYPE field 306
Table 209 ZONE CONDITION field 306
Table 210 Request Sense Data Ext command (0Bh) 308
Table 211 Reset Write Pointer Ext Command (9Fh/04h) 310
Table 212 Reset Write Pointer Ext command processing 311
Table 213 RESTORE ELEMENTS AND REBUILD command inputs 312

Table 214 Restore Physical Elements Normal Output 313
Table 215 Sanitize Status Ext Command (B4h/0000h) 315
Table 216 Crypto Scramble Ext Command (B4h/0011h) (data encryption model only) 316
Table 217 Overwrite Ext Command (B4h/0014h) 320
Table 218 Sanitize Freeze Lock Ext Command (B4h/0020h) 321
Table 219 Sanitize Antifreeze Lock Ext Command (B4h/0040h) 322
Table 220 Security Disable Password Command (F6h) 323
Table 221 Password Information for Security Disable Password command 323
Table 222 Security Erase Prepare Command (F3h) 324
Table 223 Security Erase Unit Command (F4h) 325
Table 224 Erase Unit Information 326
Table 225 Security Freeze Lock Command (F5h) 327
Table 226 Security Set Password Command (F1h) 328
Table 227 Security Set Password Information 328
Table 228 Security Unlock Command (F2h) 330
Table 229 Security Unlock Information 330
Table 230 Seek Command (7xh) 331
Table 231 SEND FPDMA QUEUED command (64h) 332
Table 232 Sense Condition command (F0h) 333
Table 233 Set Date & Time Ext Command (77h) 334
Table 234 Set Features Command (EFh) 335
Table 235 Zone Activation Control subcommand inputs 338
Table 236 Update URSWRZ bit subcommand inputs 338
Table 237 Restore Power Condition Settings subcommand 339
Table 238 Go To Power Condition subcommand 341
Table 239 Set Power Condition Timer subcommand 342
Table 240 Set Power Condition State subcommand 344
Table 241 Enable the EPC feature subcommand 345
Table 242 Disable the EPC feature subcommand 346
Table 243 Set Max ADDRESS (F9h) 348
Table 244 Set Max Set Password 350
Table 245 Set Max Set Password data contents 350
Table 246 Set Max Lock. 351
Table 247 Set Max Unlock (F9h) 352
Table 248 Set Max Freeze Lock (F9h) 353
Table 249 Set Max Address Ext Command (37h) 354
Table 250 Set Multiple Mode Commands (C6h) 356
Table 251 Set Sector Configuration Ext Commands (B2h) 357
Table 252 Sleep Command (E6h/99h) 358
Table 253 SMART Enable/Disable Attribute Autosave (B0h-D2h) 360
Table 254 SMART Enable/Disable Attribute Autosave (B0h-D4h) 361
Table 255 SMART Read Log Sector (B0h-D5h) 363
Table 256 Log sector addresses 364
Table 257 SMART Write Log (B0h-D6h) 365
Table 258 SMART Enable Operations (B0h-D8h) 366
Table 259 SMART RETURN STATUS command (B0h-DAh) 367
Table 260 Device Attribute Data Structure 369
Table 261 Individual Attribute Data Structure 370
Table 262 Device Attribute Thresholds Data Structure 374
Table 263 Individual Threshold Data Structure 374
Table 264 SMART Log Directory 375
Table 265 SMART summary error log sector 375
Table 266 Error log data structure 376
Table 267 Command data structure 376

Table 268 Error data structure 376
Table 269 Self-test log data structure 377
Table 270 Selective self-test log data structure 378
Table 271 Selective self-test feature flags 378
Table 272 SMART Error Codes 379
Table 273 Standby Command (E2h/96h) 380
Table 274 Standby Immediate Command (E0h/94h) 381
Table 275 Trusted Receive Command (5Ch) 382
Table 276 SECURITY PROTOCOL Field 382
Table 277 Trusted Receive DMA Command (5Dh) 383
Table 278 Trusted Send Command (5Eh) 384
Table 279 Trusted Send DMA Command (5Fh) 385
Table 280 Write Buffer Command (E8h) 386
Table 281 Write Buffer DMA Command (EBh) 387
Table 282 Write DMA Command (CAh/CBh) 388
Table 283 Write DMA FUA Ext Command (3Dh) 389
Table 284 Write DMA Ext Command (35h) 391
Table 285 Write FPDMA Queued Command (61h) 392
Table 286 Write Log Ext Command (3Fh) 394
Table 287 Write Log DMA Ext Command (57h) 396
Table 288 Write Multiple Command (C5h) 397
Table 289 Write Multiple Ext Command (39h) 398
Table 290 Write Multiple FUA Ext Command (CEh) 399
Table 291 Write Sector(s) Command (30h/31h) 400
Table 292 Write Sector(s) Ext Command (34h) 401
Table 293 Write Stream DMA Ext Command (3Ah) 402
Table 294 Write Stream Ext Command (3Bh) 405
Table 295 Write Uncorrectable Ext Command (45h) 408
Table 296 Zone Activate Ext Command (4Ah/08h) 409
Table 297 Zone Activation Results 411
Table 298 Zone Activation Results Header 412
Table 299 Zone Activation Descriptor 415
Table 300 Selecting candidate zones to activate and deactivate with ALL bit cleared to zero 417
Table 301 Zone Query Ext Command (4Ah/09h) 420
Table 302 Sense key / code / qualifier / status /error 422

List of figures

Figure 1 Logical Layout example: Number of Block per Sector 4096 26
Figure 2 PList physical format 29
Figure 3 Connector location 30
Figure 4 The timing of COMRESET, COMINIT and COMWAKE 32
Figure 5 Limits of temperature and altitude 33
Figure 6 Limits of temperature and humidity 34
Figure 7 Top and side views and mechanical dimensions 41
Figure 8 Bottom and side views with mounting hole locations 42
Figure 9 Connector locations 43
Figure 10 Initial Setting 71
Figure 11 Usual Operation 72
Figure 12 Password Lost 73
Figure 13 Sanitize Device state machines 110
Figure 14 Zones in a Zoned Device 129
Figure 15 Write pointer zone and write pointer after Reset Write Pointer function with no subsequent writes 133
Figure 16 Write pointer zone and write pointer example 134
Figure 17 Examples of write commands that do not start at the write pointer 134
Figure 18 Zone Condition state machine 141

1 General

1.1 Introduction

This document describes the specifications of the Ultrastar® DC HC670 a Western Digital 3.5-inch 7200-rpm Serial ATA interface hard disk drive with the following model numbers:

Table 1 Type and Model#

(26TB)

Capacity	Type	Interface	Format	Model#	Description	P3 Power Disable Supported
26 TB*2	US7SAT220	Serial ATA	512 Emulation	WSH722626ALE6L0	Instant Secure Erase,BDE off	No
				WSH722626ALE6L1	SED*1	
				WSH722626ALE6L4	Base(SE)	
				WSH722626ALE600	Instant Secure Erase,BDE off	Yes
				WSH722626ALE601	SED*1	
				WSH722626ALE604	Base(SE)	
			4k Native	WSH722626ALN6L0	Instant Secure Erase,BDE off	No
				WSH722626ALN6L1	SED*1	
				WSH722626ALN6L4	Base(SE)	
				WSH722626ALN600	Instant Secure Erase,BDE off	Yes
				WSH722626ALN601	SED*1	
				WSH722626ALN604	Base(SE)	

(25TB)

Capacity	Type	Interface	Format	Model#	Description	P3 Power Disable Supported
25TB*2	US7SAT220	Serial ATA	512 Emulation	WSH722625ALE604	Base(SE)	Yes

*1 BDE+TCG w/ Instant Secure Erase

*2 One TB equals one trillion bytes. Actual user capacity may be less due to operating environment.

How to Read Model Numbers

WSH722626ALE6L4 – 26TB SATA 6Gb/s 512e Base (SE) with Legacy Pin 3 config

W = Western Digital
S = Ultrastar SMR Technology
H = Helium
72 = 7200 RPM
26 = Max capacity (26TB)
26 = Capacity this model (26TB)
A = Generation code
L = 26.1mm z-height
E6 = Interface (512e SATA 6Gb/s)
(52 = 512e SAS 12Gb/s)
** 512e models can be converted to 4Kn format and vice versa
(Note: Changing the block size does not change the HDD Model Number reported by the drive.)
y = Power Disable Pin 3 status
(0 = Power Disable Pin 3 support
L = Legacy Pin 3 config – No Power Disable Support)
z = Data Security Mode
0 = Instant Secure Erase
1 = SED* : Self-Encryption Drive
TCG-Enterprise and Sanitize Crypto Scramble / Erase
4 = Base (SE)* : No Encryption, Sanitize Overwrite only

* ATA Security Feature Set comes standard on SATA
** See section 12.59 Set Sector Configuration Ext

1.2 Glossary

ADM	Automatic Drive Maintenance
DFT	Drive Fitness Test
ESD	Electrostatic Discharge
GB	1,000,000,000 bytes
Gbps	1,000,000,000 bits per second
ISE	Instant Secure Erase
KiB	1,024 bytes
Kbpi	1,000 bits per inch
Ktpi	1,000 tracks per inch
MiB	1,048,576 bytes
MB	1,000,000 bytes
MB/s	1,000,000 bytes per second
Mbps	1,000,000 bits per second
MiB/s	1,048,576 bytes per second
PI	Protection Information
PSID	Physical presence Security ID
S.M.A.R.T.	Self-Monitoring Analysis and Reporting Technology
SE	Secure Erase
SED	Self-Encrypting Drive
TB	1,000,000,000,000 bytes
TCG	Trusted Computing Group

1.3 General caution

Do not apply force to the top cover. Handle the drive by its edges or frame only.

Do not touch the interface connector pins or the surface of the print circuit board.

The drive can be damaged by shock or ESD (Electrostatic Discharge). Any damage sustained by the drive after removal from the shipping package and opening the ESD protective bag are the responsibility of the user.

1.4 References

- Serial ATA II: Extensions to Serial ATA 1.0
- Serial ATA International Organization: Serial ATA Revision 3.5
- Zoned Device ATA Command Set -2 (ZAC-2) Revision 14

2 General features

- Host Managed SMR (Shingled Magnetic Recording)
- Spindle speeds of 7200 RPM
- Fluid Dynamic Bearing motor
- Triple Stage Actuator
- Closed-loop actuator servo
- Load/Unload mechanism, non-head disk contact start/stop
- Automatic Actuator lock
- Write Cache
- Power saving modes/Low RPM idle mode (APM)
- S.M.A.R.T. (Self-Monitoring and Analysis Reporting Technology)
- Adaptive zone formatting
- RVS (Rotational Vibration Safeguard)
- 512MiB DDR4 Memory
- 64GB iNAND®
- Conventional Zone 1% of Total Capacity
- 256MiB zone size (Conventional/Sequential Write required)
- UnRestricted Sequential Write Required Zone default setting to be 1
- Intelligent Write Verify for SMR Technology
- Segmented buffer implementation
- Automatic Error Recovery procedures for read and write commands
- Automatic defect reallocation
- PSID support
- Data capacities of 26TB and 25TB
- Sector format of 512 bytes/sector,4096 bytes/sector
- Native command queuing support
- Self-Diagnostics at Power on.
- Serial ATA Data Transfer 6/3/1.5Gbps
- CHS and LBA mode
- security feature support
- 48 bit addressing feature
- Full Disk Encryption support (specific model only)
- Supported Zoned Device ATA Command Set - 2 (ZAC-2) (di549r14). Zone Domains feature set and Zone Realms feature set is not supported.

Part 1. Functional specification

3 Fixed disk subsystem description

3.1 Control Electronics

The drive is electronically controlled by a microprocessor, several logic modules, digital/analog modules, and various drivers and receivers. The control electronics performs the following major functions:

- Controls and interprets all interface signals between the host controller and the drive.
- Controls read write accessing of the disk media, including defect management and error recovery.
- Controls starting, stopping, and monitoring of the spindle.
- Conducts a power-up sequence and calibrates the servo.
- Analyzes servo signals to provide closed loop control. These include position error signal and estimated velocity.
- Monitors the actuator position and determines the target track for a seek operation.
- Controls the voice coil motor driver to align the actuator in a desired position.
- Constantly monitors error conditions of the servo and takes corresponding action if an error occurs.
- Monitors various timers such as head settle and servo failure.
- Performs self-checkout (diagnostics).

3.2 Head disk assembly

The head disk assembly (HDA) is assembled in a clean room environment and contains the disks and actuator assembly. Helium is constantly circulated and filtered when the drive is operational. No venting of the HDA is accomplished, as HDA is hermetically sealed.

The spindle is driven directly by an in-hub, brushless, sensor less DC drive motor. Dynamic braking is used to quickly stop the spindle.

3.3 Actuator

The read/write heads are mounted in the actuator. The actuator is a swing-arm assembly driven by a voice coil motor. A closed-loop positioning servo controls the movement of the actuator. An embedded servo pattern supplies feedback to the positioning servo to keep the read/write heads centered over the desired track.

The actuator assembly is balanced to allow vertical or horizontal mounting without adjustment.

When the drive is powered off, the actuator automatically moves the head to the actuator ramp outside of the disk where it parks.

4 Drive characteristics

This section describes the characteristics of the drive.

4.1 Default logical drive parameters

The default of the logical drive parameters in Identify Device data is as shown below.

Table 2 Formatted capacity

Description	**25TB model**	**26TB model**	
Physical Layout			
Label capacity	25TB	26TB	26TB
Bytes per Sector	4,096	4,096	4,096
Number of Heads	20	20	20
Number of Disks	10	10	10
Logical Layout[1]			
Bytes per Sector	512	512	4,096
Number of Sectors	48,830,087,168	50,782,535,680	6,347,816,960
Total Logical Data Bytes	25,001,004,630,016	26,000,658,268,160	26,000,658,268,160

Notes:

[1] Logical layout: Logical layout is an imaginary drive parameter (that is, the number of heads) which is used to access the drive from the system interface. The Logical layout to Physical layout (that is, the actual Head and Sectors) translation is done automatically in the drive. The default setting can be obtained by issuing an IDENTIFY DEVICE command

4.2 Data sheet

Table 3 Data sheet

Description	25TB Model	26TB Model
Max Data transfer rate (Mbps)	2,450	2,450
Max Interface transfer rate (MB/s)	600	600
OD Sustained transfer rate (MB/s)	231	249
OD Sustained transfer rate (MiB/s)	220	238
Max Sustained transfer rate (MB/s) *1	243	261
Max Sustained transfer rate (MiB/s) *1	232	249
Memory size (MiB)	512	512
Rotational speed (RPM)	7,200	7,200
Recording density- max (Kbpi)	2052	2,133
Track density (Ktpi)	625	625
Areal density - max (Gbits/in^2)	1271	1,322

*1 Based on internal testing; performance may vary depending on host environment, drive capacity, logical block address (LBA), and other factors.The location of the max rate is at approximately 10% into the capacity of the HDD.

4.3 Worldwide Name Assignment

Table 4 World Wide Name Assignment

Description	WWN
Organizationally Unique Identifier (OUI)	000CCAh (for Western Digital)
SHBU Block Assignment	2BEh, 2BFh, 2C0h (Thailand)

4.4 Drive organization

4.4.1 Drive Format

Upon shipment from Western Digital manufacturing the drive satisfies the sector continuity in the physical format by means of the defect flagging strategy described in Section 5 on page 29 to provide the maximum performance to users.

4.4.2 Cylinder allocation

Physical cylinder is calculated from the starting data track of 0. It is not relevant to logical CHS. Depending on the capacity some of the inner zone cylinders are not allocated.

Data cylinder

This cylinder contains the user data which can be sent and retrieved via read/write commands and a spare area for reassigned data.

Spare cylinder

The spare cylinder is used by Western Digital manufacturing and includes data sent from a defect location.

4.4.3 Zone Layout

The LBAs are divided into ranges called zones.
The entire capacity of a zoned block device is organized into a set of contiguous, non-overlapping zones.
Zone size 256MiB
Conventional Zone 1% of Total Capacity
Sequential write required zone 99% of Total Capacity

Table 5 Zone Layout

Description	25TB model	26TB model	
Logical Layout			
Bytes per Sector	512	512	4096
Number of Conventional Zone	931	969	969
Start LBA	0	0	0
End LBA	488,281,250	507,812,500	63,476,563
Number of Sequential write required zone	92,201	95,889	95,889
Start LBA	488,281,251	507,812,501	63,476,564
End LBA	48,828,125,000	50,781,250,000	6,347,656,250
Number of Sectors	48,828,125,001	50,781,250,001	6,347,656,251

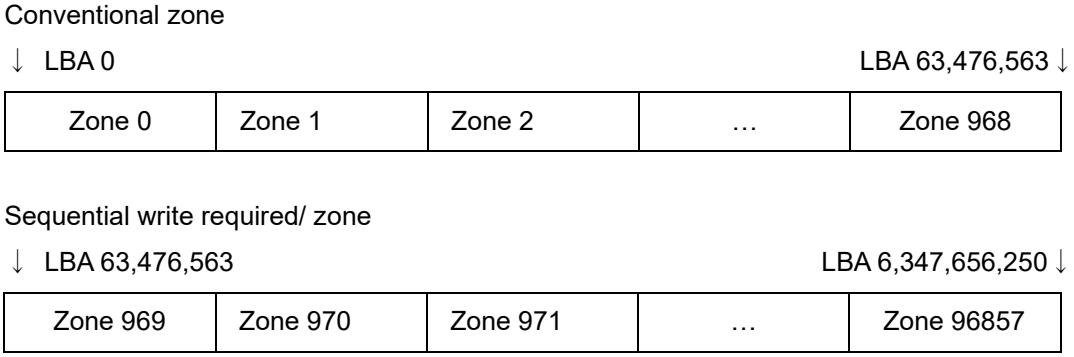

Figure 1 Logical Layout example: 26TB model, Number of Block per Sector 4096

4.5 Performance characteristics

Drive performance is characterized by the following parameters:

- Command overhead
- Mechanical positioning
- Latency
- Data transfer speed
- Buffering operation (Look ahead/Write cache)

All the above parameters contribute to drive performance. There are other parameters that contribute to the performance of the actual system. This specification defines the characteristics of the drive, not the characteristics of the system throughput which depends on the system and the application.

The terms “Typical” and “Max” are used throughout this specification with the following meanings: Typical. The average of the drive population tested at nominal environmental and voltage conditions. Max. The maximum value measured on any one drive over the full range of the environmental and voltage conditions. (See Section 6.2, “Environment” and Section 6.3, “DC Power Requirements”)

4.5.1 Mechanical positioning

4.5.1.1 Average latency

Table 6 Latency Time

Rotational speed	Time for a revolution (ms)	Average latency (ms)
7200 RPM	8.3	4.16

4.5.2 Drive ready time

Table 7 Drive ready time

Power on to ready	POR Condition	Typical (sec)	Maximum (sec)
10 Disk model	Controlled POR without Deferred FW Activation	25	30
	Controlled POR with Deferred FW Activation	N/A	60
	Uncontrolled POR (EPO) with destage to media cache and possible Deferred FW Activation	N/A	75

Ready The condition in which the drive can perform a media access command (such as read, write) immediately

Power on This includes the time required for the internal self-diagnostics.

Notes: *The typical and maximum drive ready times in the table are for proper power shutdown using the required power-off sequence. The actual time may vary depending on the drive pre-condition before the EPO event.*

4.5.3 Operating modes

4.5.3.1 Operating mode descriptions

Operating mode	Description
Spin up	Period of time from 0 rpm to full rpm
Start up	Period of time from power on to drive ready.
Seek	Seek operation mode
Write	Write operation mode
Read	Read operation mode
Active	Drive is able to perform a media access command (such as read, write) immediately
Idle_0	Drive Ready, but not performing IO, drive may power down selected electronics to reduce power without increasing response time
Idle_A	Drive Ready, but not performing IO, drive may power down selected electronics to reduce power without increasing response time
Idle_B	Spindle rotation at 7200 RPM with heads unloaded
Idle_C/Standby_Y	Spindle rotation at Low RPM with heads unloaded
Standby_Z	Actuator is unloaded and spindle motor is stopped. Commands can be received immediately
Sleep (SATA)	Actuator is unloaded and spindle motor is stopped. Only soft reset or hard reset can change the mode to standby_z

Note: Upon power down or spindle stop a head locking mechanism will secure the heads in the OD parking position.

4.5.3.2 Mode transition times

Mode transition times are shown below

Table 8 Mode transition times

From	To	RPM	Typical (sec)
Idle_B	Active	7200	1.5
Idle_C	Active	6300 -> 7200	4
Standby_Y	Active	6300 -> 7200	4
Standby_Z	Active	0 > 7200	15

Note: Maximum transition time of 30 Seconds based on drive timeout value

5 Defect flagging strategy

Media defects are remapped to the next available sector during the Format Process in manufacturing. The mapping from LBA to the physical locations is calculated by an internally maintained table.

5.1 Shipped format

- Data areas are optimally used.
- No extra sector is wasted as a spare throughout user data areas.
- All pushes generated by defects are absorbed by the spare tracks of the inner zone.

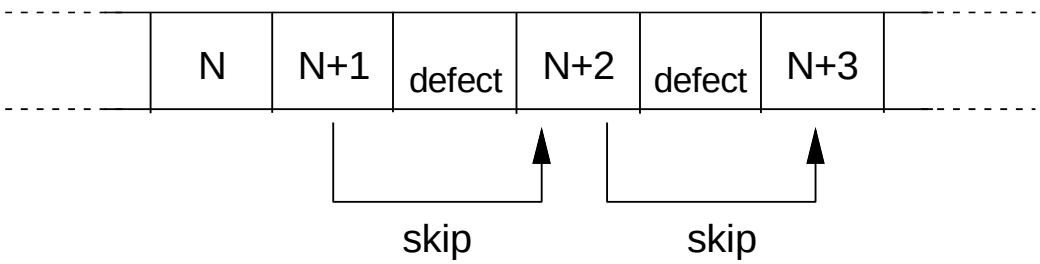

Figure 2 PList physical format

Defects are skipped without any constraint, such as track or cylinder boundary. The calculation from LBA to physical is done automatically by internal table.

6 Specification

6.1 Electrical interface

6.1.1 Connector location

Refer to the following illustration to see the location of the connectors.

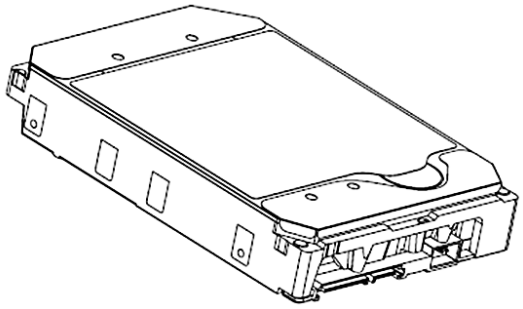

Figure 3 Connector location

6.1.1.1 Signal connector

A Serial ATA device may be either directly connected to a host or connected to a host through a cable.

For direct connection, the device plug connector is inserted directly into a backplane connector. The device plug connector and the backplane connector incorporate features that enable the direct connection to be hot pluggable and blind mate able.

For connection via cable, the device signal plug connector mates with the signal cable receptacle connector on one end of the cable. The signal cable receptacle connector on the other end of the cable is inserted into a host signal plug connector. The signal cable wire consists of two twinax sections in a common outer sheath.

Besides the signal cable, there is also a separate power cable for the cabled connection. A Serial ATA power cable includes a power cable receptacle connector on one end and may be directly connected to the host power supply on the other end or may include a power cable receptacle on the other end. The power cable receptacle connector on one end of the power cable mates with the device power plug connector. The other end of the power cable is attached to the host as necessary.

6.1.2 Signal definition

SATA has receivers and drivers to be connected to Tx+/- and Rx +/- Serial data signal.
Defines the signal names of I/O connector pin and signal name.

Table 9 Interface connector pins and I/O signals

	No.	Plug Connector pin definition		Signal	I/O
Signal	S1	GND	2nd mate	Gnd	
	S2	A+	Differential signal A from Phy	RX+	Input
	S3	A-		RX-	Input
	S4	Gnd	2nd mate	Gnd	
	S5	B-	Differential signal B from Phy	TX-	Output
	S6	B+		TX+	Output
	S7	Gnd	2nd mate	Gnd	
Key and spacing separate signal and power segments					
Power	P1	Reserved*	NOT USED (P1 and P2 tied internally)	Reserve	
	P2	Reserved*	Not USED (P1 and P2 tied internally)	Reserve	
	P3	Reserved* or PWDIS* (option)	Not USED (P1, P2 and P3 tied internally) or Enter/Exit Power Disable (option)	Reserve or PWDIS	
	P4	Gnd	1st mate	Gnd	
	P5	Gnd	2nd mate	Gnd	
	P6	Gnd	2nd mate	Gnd	
	P7	V5	5V power,pre-charge,2nd Mate	5V	
	P8	V5	5V power	5V	
	P9	V5	5V power	5V	
	P10	Gnd	2nd mate	Gnd	
	P11	Reserved	Support staggered spin-up and LED activity VDih max=2.1V	Reserve	
	P12	Gnd	1st mate	Gnd	
	P13	V12	12V power,pre-chage,2nd mate	V12	
	P14	V12	12V power	V12	
	P15	V12	12V power	V12	

** SATA Specification Revision 3.1 and prior revisions assigned 3.3V to pins P1, P2 and P3. In addition, device plug pins P1, P2, and P3 were required to be bused together. In the standard configuration of this product,*

P3 is connected with P1 and P2 and this product behaves as SATA 3.1 or prior version product in a system designed to SATA 3.2 system that does not support the 3.3 feature. For product with the optional SATA 3.3 Power Disable Feature supported, P3 is now assigned as the POWER DISABLE CONTROL PIN. If P3 is driven HIGH (2.1V-3.6V max)*, power to the drive circuitry will be disabled. Drives with this optional feature WILL NOT POWER UP in systems designed to SATA Spec Revision 3.1 or earlier because P3 driven HIGH will prevent the drive from powering up.*

6.1.2.1 TX+ / TX-

These signals are the outbound high-speed differential signals that are connected to the serial ATA cable.

6.1.2.2 RX+ / RX-

These signals are the inbound high-speed differential signals that are connected to the serial ATA cable.

6.1.2.3 5V PRECHARGE

+5 Vdc that is available on the extended pins. It is used for PRECHARGE when connected to backplane incorporated feature.

6.1.2.4 12V PRECHARGE

+12 Vdc that is available on the extended pins. It is used for PRECHARGE when connected to backplane incorporated feature.

6.1.3 Out of band signaling

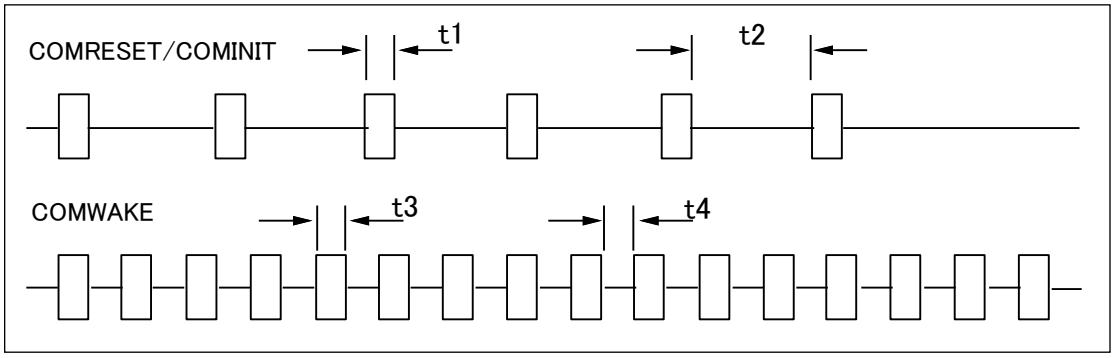

Figure 4 The timing of COMRESET, COMINIT and COMWAKE

Table 10 Parameter descriptions

	PARAMETER DESCRIPTION	Nominal (ns)
t1	ALIGN primitives	106.7
t2	Spacing	320
t3	ALIGN primitives	106.7
t4	Spacing	106.7

6.2 Environment

6.2.1 Temperature and humidity

Table 11 Temperature and humidity

System Responsibility	
The system is responsible for maintaining a drive sensor temperature below 60C. Drive sensor temperature is as reported using SMART SCT.	
Operating ambient conditions	
Temperature Relative humidity Maximum wet bulb temperature Maximum temperature gradient Altitude	5 to 60°C 8 to 90% non-condensing 29.4°C non-condensing 20°C/Hour –300 to 3,048 m
Non-Operating conditions	
Temperature Relative humidity Maximum wet bulb temperature Maximum temperature gradient Altitude	-40 to 70°C (Storage 0 to 70°C) 5 to 95% non-condensing 35°C non-condensing 30°C/Hour –300 to 12,000 m (Inside dashed-dotted line of Figure 5)

Notes:
1. Noncondensing conditions should be maintained at any time.

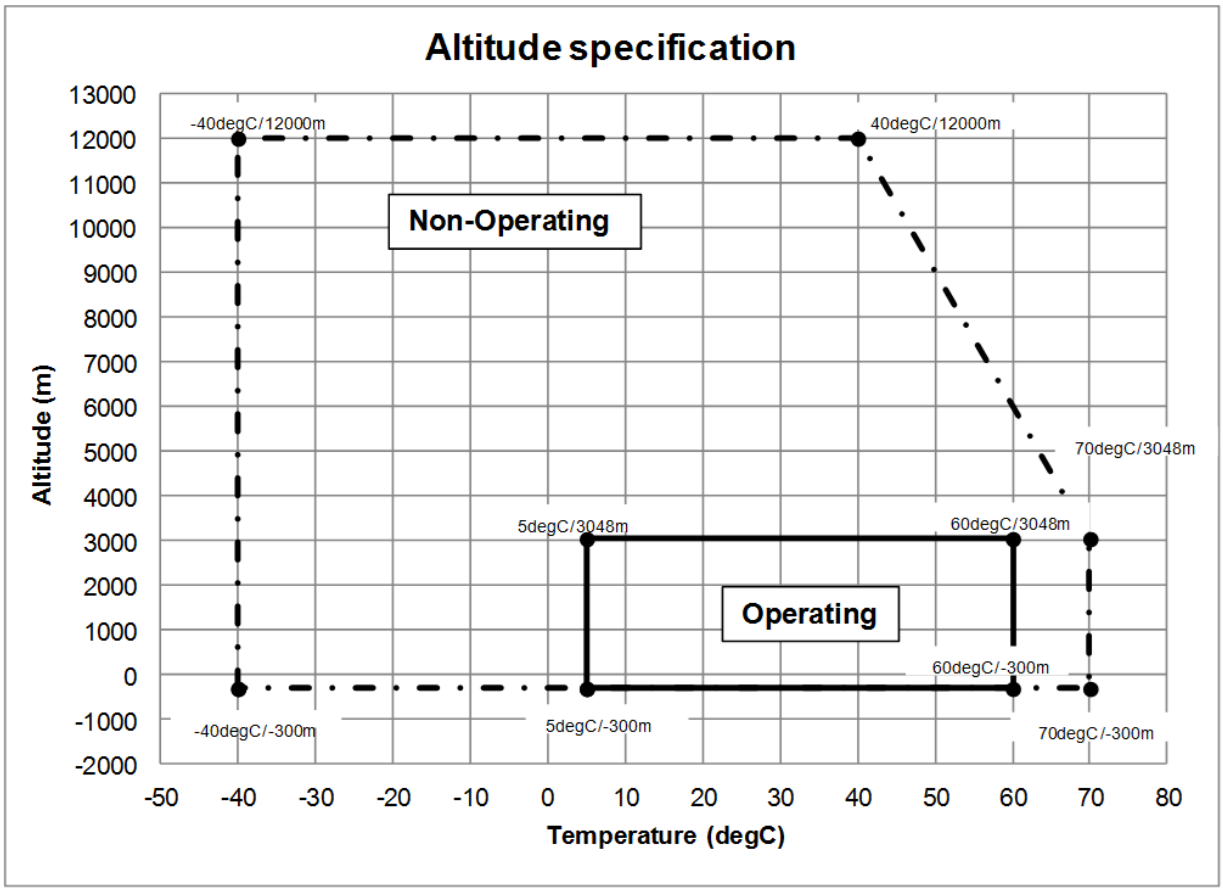

Figure 5 Limits of temperature and altitude

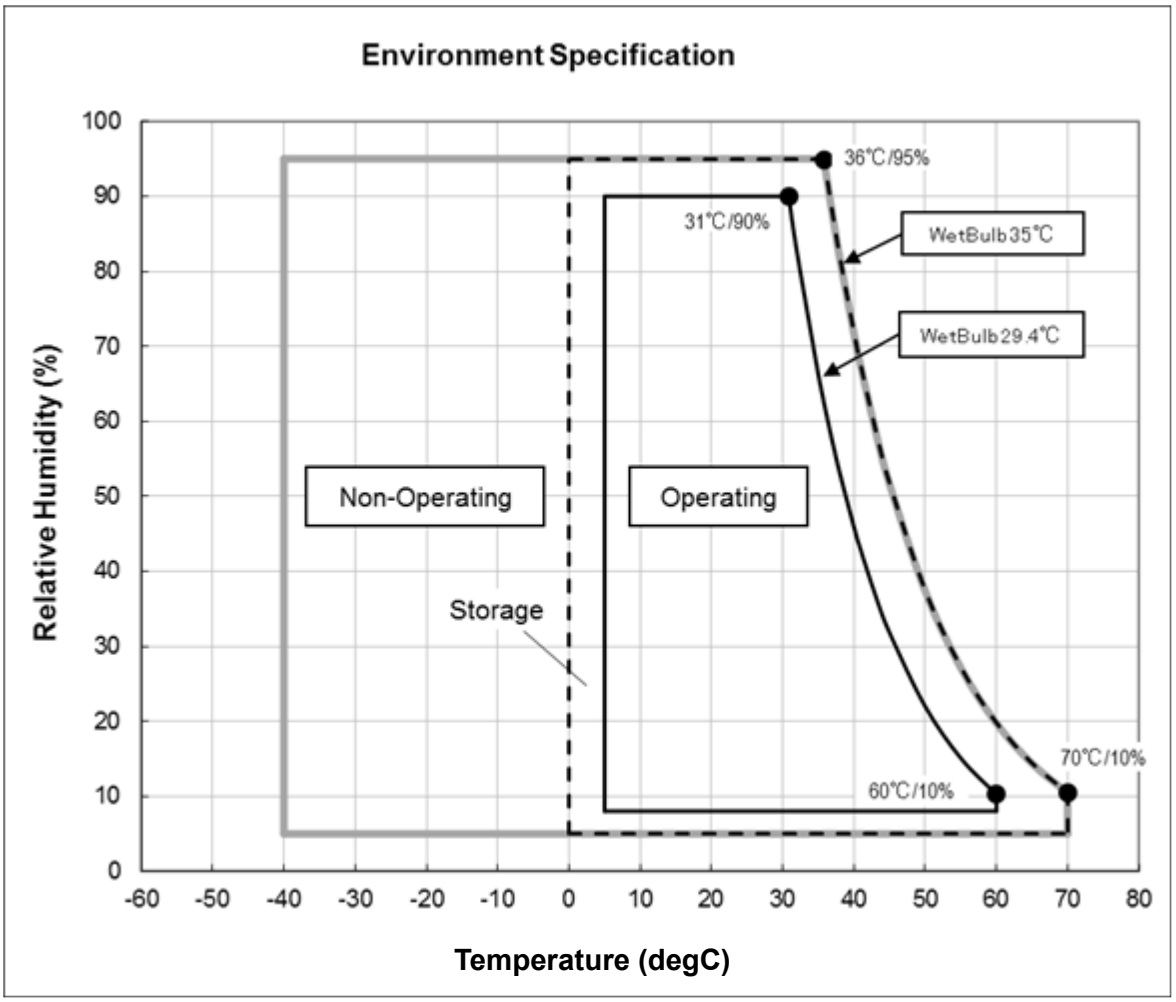

Figure 6 Limits of temperature and humidity

6.2.2 Storage Requirements

6.2.2.1 Packaging

The drive or option kit must be heat-sealed in a moisture barrier bag with bag supplied by Western Digital.

6.2.2.2 Storage Time

The drive may not remain inoperative for a period of more than one year whether or not the original shipping package is opened.

6.2.3 Corrosion test

The drive shows no sign of corrosion inside and outside of the hard disk assembly and is functional after being subjected to seven days at 50°C with 90% relative humidity.

6.2.4 Atmospheric condition

Environments that contain elevated levels of corrosives (e.g., hydrogen sulfide, sulfur oxides, or hydrochloric acid) should be avoided. Care must be taken to avoid using any compound/material in a way that creates an elevated level of corrosive materials in the atmosphere surrounding the disk drive. Care must also be taken to avoid use of any organometallic (e.g., organosilicon, or organotin) compound/material in a way that creates elevated vapor levels of these compounds/materials in the atmosphere surrounding the disk drive.

6.3 DC power requirements

Damage to the drive electronics may result if the power supply cable is connected or disconnected to the legacy Power connector while power is being applied to the drive (no hot plug/unplug is allowed). If SATA power supply cable is connected or disconnected to the SATA power connector, hot plug/unplug is allowed.

Table values for current and power are considered ‘typical’ values. Typical is defined as observed average or observed maximum in a sample of 6 drives per model under voltage conditions of 5.0V and 12.0V at the drive reported temperatures as noted.

6.3.1 Input voltage

Table 12 Input voltage

Input voltage	During run and spin up	Absolute max spike voltage	Supply rise time
+5 Volts Supply	5V ± 5%	–0.3 to 5.5V	0 to 200ms
+12 Volts Supply	12V ± 5%	–0.3 to 15.0V	0 to 400ms

Caution: To avoid damage to the drive electronics, power supply voltage spikes must not exceed specifications.

6.3.2 Power supply current

Table 13 SATA power consumption

(SATA)
Serial ATA @ 6Gb/sec

25TB Model

	IO/Sec	+5V Current (Amp)	+12V Current (Amp)	Power (Watts)
Max Peak Operational [1]		0.98	2.00	
Start up Peak DC [2]		0.70	1.31	
Start up Peak AC [3]		0.81	2.00	
Idle_0 Ave.		0.35	0.33	5.7
Idle Ripple		0.10	0.28	
Random Read 4KB Qd=1 Peak [1]		0.88	1.87	
Random Read 4KB Qd=1 Ave.	83	0.47	0.50	8.3
Random Read 4KB Qd=4 Peak [1]		0.91	1.90	
Random Read 4KB Qd=4 Ave.	117	0.47	0.59	9.4
Max Power Workload				
Random Read 4KB Qd=8 Peak [1]		0.89	1.91	
Random Read 4kB Qd=8 Ave.	142	0.48	0.61	9.7
Random SMR Zone Workload				
Random SMR Zone Write 128z 64KB Qd=1 WCE=1 Peak [1]		0.98	1.72	
Random SMR Zone Write 128z 64KB Qd=1 WCE=1 Ave.	1190	0.66	0.35	7.5
Sequential Read 64KB Qd=1 Peak [1]	MiB/s	0.95		
Sequential Read 64KB Qd=1 Ave. [4]	220	0.79	0.31	7.7
Sequential Write 64KB Qd=1 WCE=1 Peak [1]	MiB/s	0.98		
Sequential Write 64KB Qd=1 WCE=1 Ave. [4]	220	0.77	0.31	7.6

Power Save Mode	+5V Current (Amp)	+12V Current (Amp)	Power (Watts)	Power Saved (Watts) [5]
Idle_A	0.35	0.33	5.7	0.0
Idle_B	0.25	0.21	3.8	1.9
Idle_C	0.25	0.17	3.3	2.4
Standby_Y	0.25	0.17	3.3	2.4
Standby_Z	0.24	0.01	1.3	4.4
Sleep	0.24	0.01	1.3	4.4

PHY power condition	Port A Power Saved (Watts)
Partial	0.05
Slumber	0.18

Notes

Sample size	6 HDDs per model
Temperature	HDD reported temperature = 40degC (25degC for Start up)
Sampling rate	62.5K measurements/sec (200K samples/sec for Start up)
PHY	Single port, 6Gb/s

[1] Peak current is established via the average current in a 16 usec moving window. The peak values of the HDDs in the population are then averaged and reported.

[2] Start up DC (average) current is measured within a 200ms sliding window. The peak DC values of the HDDs in the population are then averaged and reported.

[3] Start up AC current is sampled at 200kHz. The peak sample values of the HDDs in the population are then averaged and reported.

[4] Average measured at sustained sequential streaming rate.

[5] Power saved compared to Idle_0

(SATA)
Serial ATA @ 6Gb/sec

26TB Model

	IO/Sec	+5V Current (Amp)	+12V Current (Amp)	Power (Watts)
Max Peak Operational [1]		0.97	2.00	
Start up Peak DC [2]		0.70	1.33	
Start up Peak AC [3]		0.80	2.00	
Idle_0 Ave.		0.37	0.33	5.7
Idle Ripple		0.09	0.17	
Random Read 4KB Qd=1 Peak [1]		0.88	1.88	
Random Read 4KB Qd=1 Ave.	83	0.46	0.50	8.3
Random Read 4KB Qd=4 Peak [1]		0.92	1.90	
Random Read 4KB Qd=4 Ave.	118	0.47	0.59	9.3
Max Power Workload				
Random Read 4KB Qd=8 Peak [1]		0.92	1.93	
Random Read 4kB Qd=8 Ave.	142	0.47	0.61	9.7
Random SMR Zone Workload				
Random SMR Zone Write 128z 64KB Qd=1 WCE=1 Peak [1]		0.97	1.73	
Random SMR Zone Write 128z 64KB Qd=1 WCE=1 Ave.	1190	0.65	0.35	7.4
Sequential Read 64KB Qd=1 Peak [1]	MiB/s	0.96		
Sequential Read 64KB Qd=1 Ave. [4]	238	0.80	0.31	7.7
Sequential Write 64KB Qd=1 WCE=1 Peak [1]	MiB/s	0.97		
Sequential Write 64KB Qd=1 WCE=1 Ave. [4]	238	0.77	0.31	7.5

Power Save Mode	+5V Current (Amp)	+12V Current (Amp)	Power (Watts)	Power Saved (Watts) [5]
Idle_A	0.37	0.33	5.7	0.0
Idle_B	0.25	0.21	3.7	2.0
Idle_C	0.25	0.17	3.3	2.5
Standby_Y	0.25	0.17	3.3	2.5
Standby_Z	0.23	0.01	1.3	4.4
Sleep	0.23	0.01	1.3	4.4

PHY power condition	Port A Power Saved (Watts)
Partial	0.05
Slumber	0.18

Notes

Sample size	6 HDDs per model
Temperature	HDD reported temperature = 40degC (25degC for Start up)
Sampling rate	62.5K measurements/sec (200K samples/sec for Start up)
PHY	Single port, 6Gb/s

[1] Peak current is established via the average current in a 16 usec moving window. The peak values of the HDDs in the population are then averaged and reported.

[2] Start up DC (average) current is measured within a 200ms sliding window. The peak DC values of the HDDs in the population are then averaged and reported.

[3] Start up AC current is sampled at 200kHz. The peak sample values of the HDDs in the population are then averaged and reported.

[4] Average measured at sustained sequential streaming rate.

[5] Power saved compared to Idle_0

6.3.3 Power line noise limits

Table 14 Allowable power supply noise limits at drive power connector

	Noise Voltage (mV pp)	**Frequency Range**
+5V DC	250	100Hz-20MHz
+12V DC	800	100Hz-8KHz
	450	8KHz-100KHz
	250	100KHz-20MHz

During drive operation, both 5 and 12-volt ripple are generated by the drive due to dynamic loading of the power supply. This voltage ripple will add to existing power supply voltage ripple. The sum is the power line noise.

To prevent significant performance loss, the power line noise level when measured at the drive power connector should be kept below the limits in the above table.

6.3.4 Power Consumption Efficiency

Table 15 Power consumption efficiency

Power Consumption Efficiency at Idle	**25TB Model**	**26TB Model**
W/TB	0.228	0.219
W/GB	0.000228	0.000219

6.4 Workload

6.4.1 Workload

The maximum rated workload is <550TB/YR. The workload can be comprised of reads and/or writes.
The maximum rated workload is specified for operating at typical temperatures.
Occasional* excursions in operating conditions between the “typical AFR specification conditions” and the “maximum drive operating conditions” may occur without significant impact to reliability.

*Occasional excursions shall not exceed 2% of total run time.

6.5 Reliability

6.5.1 Annualized failure rate

This product has a 0.35% AFR specification rating based on typical workload and temperatures.
The AFR specification is based on a sample population and is estimated by statistical measurements and acceleration algorithms under typical operating conditions at 40C device reported temperature.
Derating of AFR will occur above these parameters, up to 550TB/YR workload and 60C (device reported temp).
AFR ratings do not predict an individual drive's reliability and do not constitute a warranty.

6.5.2 Data integrity

OptiNAND™'s Enhance Data Safety feature allows up to 128MiB of user data protection in event of Emergency Power Off event. Data is power-loss safe in both Write Cache Enabled and Write Cache Disabled modes.

No customer data is lost during power loss. If write cache option is active, user data will be written to iNAND upon successful completion of a FLUSH CACHE (E7h) or FLUSH CACHE EXT (EAh) command. This feature can be disabled to cause FLUSH CACHE commands to flush data to media instead of iNAND if desired.

6.5.3 Cable noise interference

To avoid any degradation of performance throughput or error rate when the interface cable is routed on top or comes in contact with the HDA assembly, the drive must be grounded electrically to the system frame by four screws. The common mode noise or voltage level difference between the system frame and power cable ground or AT interface cable ground should be in the allowable level specified in the power requirement section.

6.5.4 Load/Unload

The product supports a minimum of 600,000 normal load/unloads in a 40° C environment.
Load/unload is invoked by transition of the HDD's power mode. (Chapter 4.5.3 Operating modes)

Idle (Idle_A) <-> unload idle (Idle_B)
Idle (Idle_A) <-> Low rpm idle (Idle_C)

6.5.5 Start/stop cycles

The drive withstands a minimum of 50,000 start/stop cycles in a 40° C environment and a minimum of 10,000 start/stop cycles in extreme temperature or humidity within the operating range.

6.5.6 Preventive maintenance

None

6.5.7 Data reliability

Probability of not recovering data is 1 in 10^{15} bits read.
LDPC on the fly/ offline data correction

- 4608-bit LDPC
- This implementation recovers maximum 2500 bits single burst error by on-the-fly correction and maximum 3500 bits single burst error by offline correction

6.5.8 Required Power-Off Sequence

The required sequence for removing power from the drive is as follows:

Step 1: Issue a STOP UNIT Command
- Standby
- Standby immediate
- Sleep

Note: Do not use the Flush Cache command for the power off sequence because this command does not invoke Unload

Step 2: Wait until the Command Complete status is returned. However, the time out value needs to be 60 seconds considering error recovery time.

Step 3: Terminate power to HDD.

6.6 Mechanical specifications

6.6.1 Physical dimensions

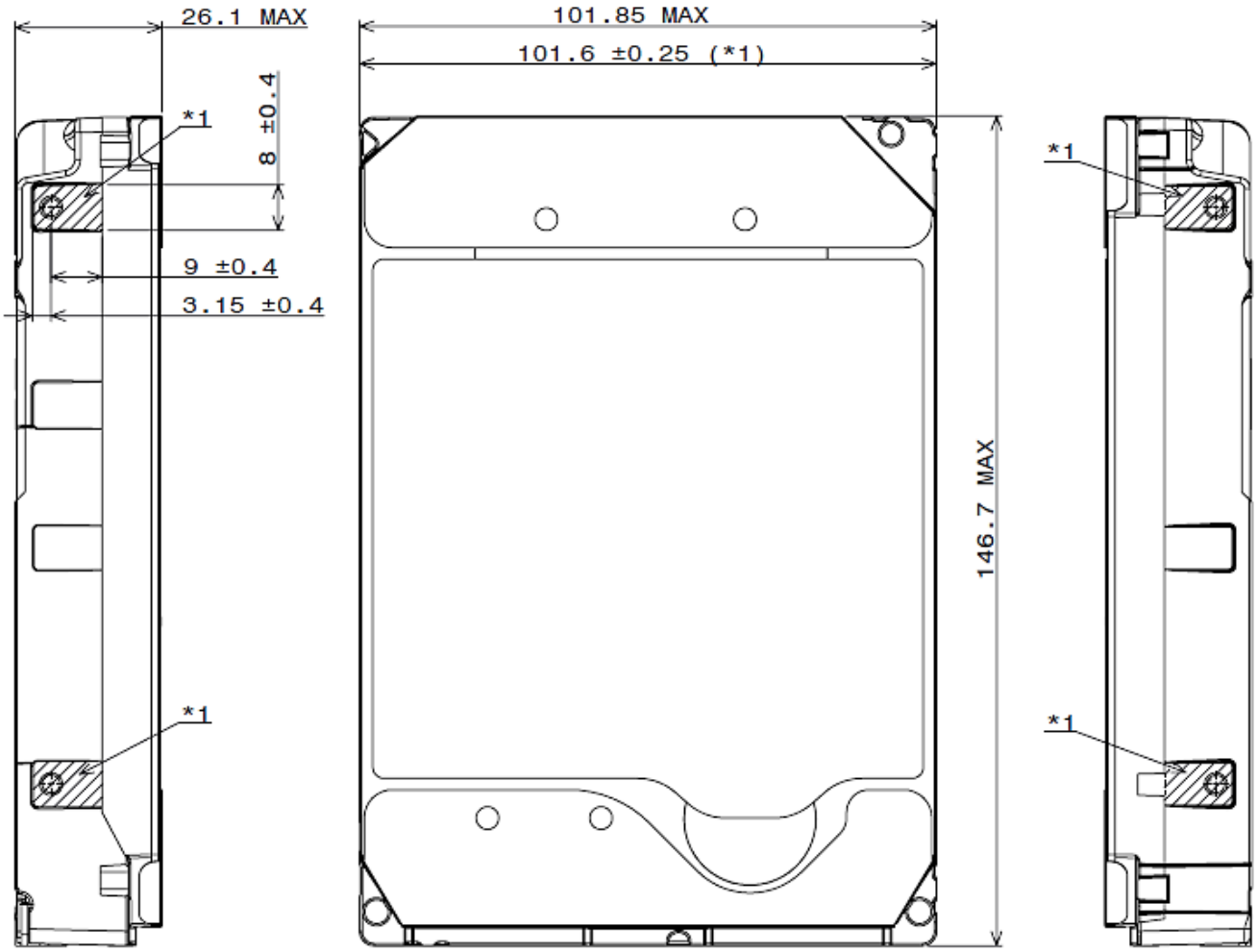

Figure 7 Top and side views and mechanical dimensions

All dimensions are in millimeters.

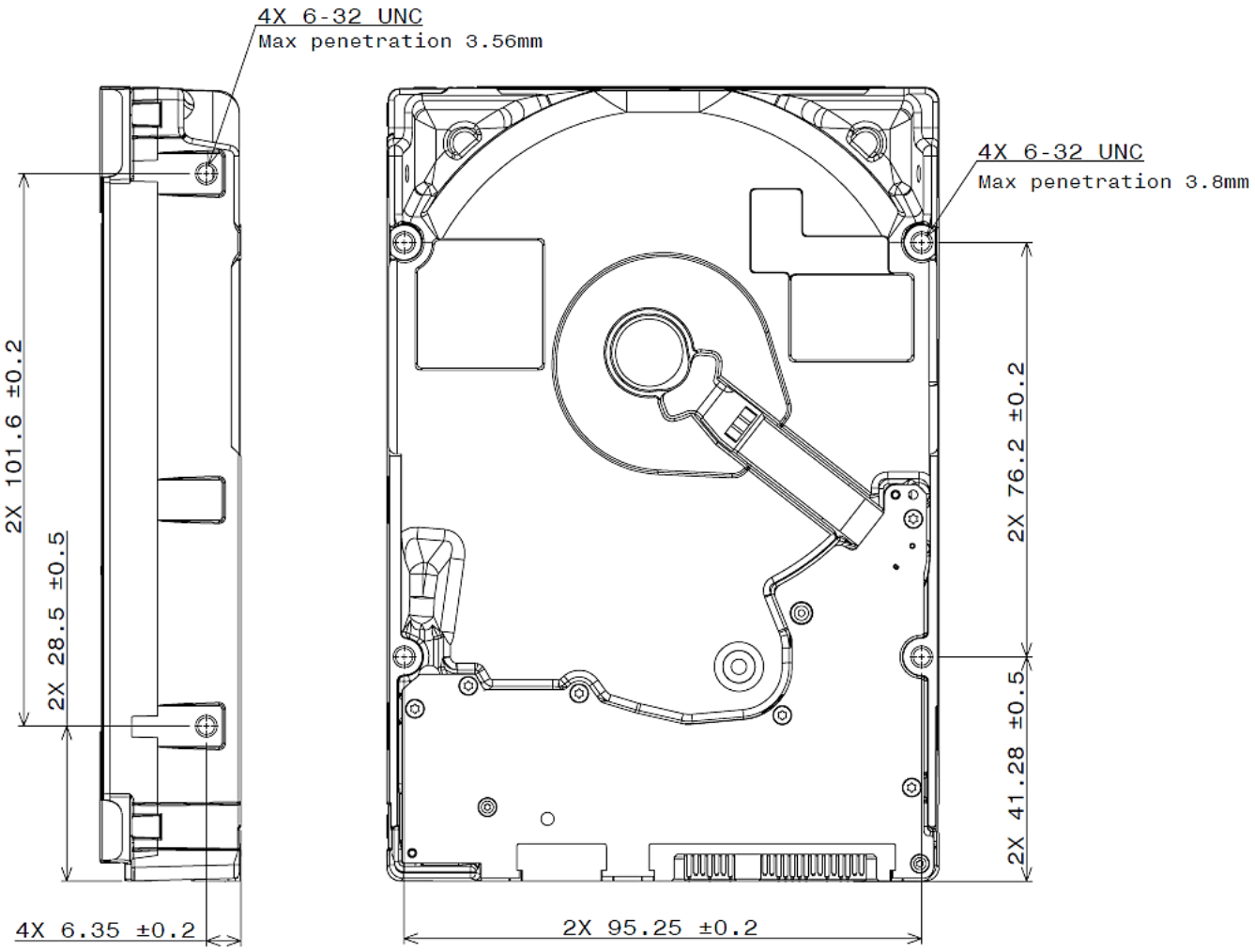

Figure 8 Bottom and side views with mounting hole locations

All dimensions in the above figure are in millimeters.

The following table shows the physical dimensions of the drive.

Table 16 Physical Dimensions

Height (mm)	Width (mm)	Length (mm)	Weight (grams)
26.1 MAX	101.6 ± 0.25	147 MAX	670 MAX

6.6.2 Connector locations

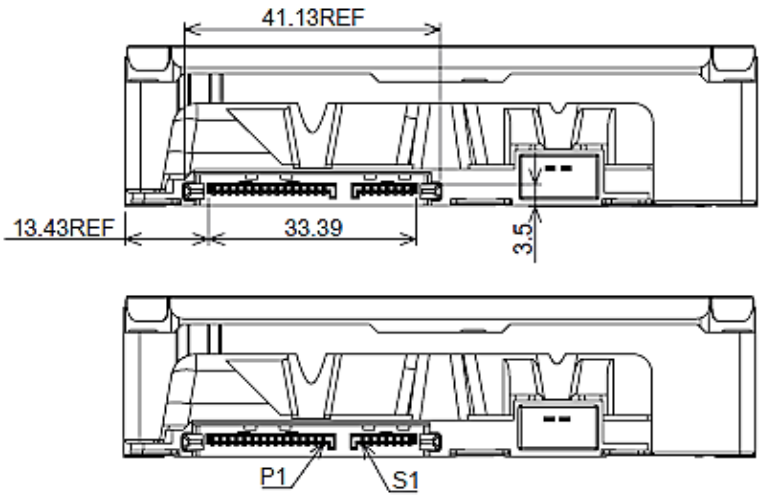

Figure 9 Connector locations

6.6.3 Drive mounting

The drive will operate in all axes (6 directions). Performance and error rate will stay within specification limits if the drive is operated in other orientations than that in which it was formatted.

For reliable operation, the drive must be mounted in the system securely enough to prevent excessive motion or vibration of the drive during seek operation or spindle rotation, using appropriate screws or equivalent mounting hardware.

The recommended mounting screw torque is 0.6 - 1.0 Nm (6-10 Kgf.cm).

The recommended mounting screw depth is 3.8 mm maximum for bottom and 3.56 mm maximum for horizontal mounting.

Drive level vibration test and shock test are to be conducted with the drive mounted to the table using the bottom four screws.

6.6.4 Heads unload and actuator lock

Heads are moved out from disks (unload) to protect the disk data during shipping, moving, or storage. Upon power down, the heads are automatically unloaded from disk area and the locking mechanism of the head actuator will secure the heads in unload position.

6.7 Vibration and shock

All vibration and shock measurements recorded in this section are made with a drive that has no mounting attachments for the systems. The input power for the measurements is applied to the normal drive mounting points.

6.7.1 Operating vibration

6.7.1.1 Random vibration (Linear)

The test is 30 minutes of random vibration using the power spectral density (PSD) levels shown below in each of three mutually perpendicular axes. The disk drive will operate without a hard error when subjected to the below random vibration levels.

Table 17 Random vibration PSD profile break points (operating)

Frequency	5 Hz	17 Hz	45 Hz	48 Hz	62 Hz	65 Hz	150 Hz	200 Hz	500 Hz	RMS (m/sec^2)
$[(m/sec^2)^2/Hz]$	2.1 x 10E–3	1.2 x 10E–1	1.2 x 10E–1	8.4 x 10E–1	8.4 x 10E–1	1.0 x 10E–1	1.0 x 10E–1	5.2x 10E–2	5.2 x 10E-2	6.86

The overall RMS (root mean square) level is 6.86 m/sec^2 (0.7 G).

6.7.1.2 Swept sine vibration (Linear)

The drive will meet the criteria shown below while operating in the specified conditions:

- No hard error occurs with 4.9 m/sec^2 (0.5 G) 0 to peak, 5 to 300 to 5 Hz sine wave, 0.5 oct/min sweep rate with 3-minute dwells at two major resonances
- No hard error occurs with 9.8 m/sec^2 (1 G) 0 to peak, 5 to 300 to 5 Hz sine wave, 0.5 oct/min sweep rate with 3-minute dwells at two major resonances

6.7.1.3 Random vibration (Rotational)

The drive will meet the criteria shown below while operating in the specified conditions:

- Less than 10% Performance degradation
- The overall RMS (Root Mean Square) level of vibration is 12.5Rad/sec^2. PSD profile is shown below.

Table 18 Random vibration (Rotational) PSD profile break points

Frequency	20 Hz	100 Hz	200 Hz	800 Hz	1000 Hz	1500 Hz	1700 Hz	2000 Hz	RMS (Rad/s^2)
$[(Rad/s^2)^2/Hz]$	1.90E -02	1.90E -02	1.87E -01	1.87E -01	5.33E -02	7.70E -03	4.00E -03	4.00E -03	12.5

6.7.2 Nonoperating vibration

The drive does not sustain permanent damage or loss of previously recorded data after being subjected to the environment described below

6.7.2.1 Random vibration

The test consists of a random vibration applied for each of three mutually perpendicular axes with the time duration of 10 minutes per axis. The PSD levels for the test simulate the shipping and relocation environment shown below. The overall RMS (Root Mean Square) level of vibration is 10.2 m/sec^2 (1.04 G).

Table 19 Random vibration PSD profile break points (nonoperating)

Frequency	2 Hz	4 Hz	8 Hz	40 Hz	55 Hz	70 Hz	200 Hz
$[(m/sec^2)^2/Hz]$	0.096	2.89	2.89	0.289	0.962	0.962	0.096

6.7.2.2 Swept sine vibration

- 19.6 m/sec^2 (2 G) (Zero to peak), 5 to 500 to 5 Hz sine wave
- 0.5 oct/min sweep rate
- 3 minutes dwell at two major resonances

6.7.3 Operating shock

The drive meets the following criteria while operating in the conditions described below. The shock test consists of 10 shock inputs in each axis and direction for total of 60. There must be a delay between shock pulses long enough to allow the drive to complete all necessary error recovery procedures.

- No hard error occurs with a 98.1 m/sec^2 (10 G) half-sine shock pulse of 11 ms duration
- No hard error occurs with a 294 m/sec^2 (30 G) half-sine shock pulse of 4 ms duration.
- No hard error occurs with a 392 m/sec^2 (40 G, write), 392 m/sec^2 (40 G, read) half-sine shock pulse of 2 ms duration

6.7.4 Nonoperating shock

The drive will operate without non-recoverable errors after being subjected to shock pulses with the following characteristics.

6.7.4.1 Trapezoidal shock wave

- Approximate square (trapezoidal) pulse shape
- Approximate rise and fall time of pulse is1 ms
- Average acceleration level is 490 m/sec^2 (50 G). (Average response curve value during the time following the 1 ms rise time and before the 1 ms fall with a time "duration of 11 ms")
- Minimum velocity change is 4.23 m/sec

6.7.4.2 Sinusoidal shock wave

The shape is approximately half-sine pulse. The figure below shows the maximum acceleration level and duration.

Table 20 Sinusoidal shock wave

Acceleration level (m/sec^2)	Duration (ms)
1960(200G)	2
1470(150G)	11

6.7.5 Nonoperating Rotational shock

All shock inputs shall be applied around the actuator pivot axis.

Table 21 Rotational Shock

Duration	Rad/sec^2
1 ms	30,000
2 ms	20,000

6.8 Acoustics

The upper limit criteria of the octave sound power levels are given in Bels relative to one picowatt and are shown in the following table. The sound power emission levels are measured in accordance with ISO 7779.

Table 22 Sound power levels

Mode	7200rpm (Typical / Max)
Idle	2.0 / 2.5
Operating	3.2 / 3.4

Mode definition:

Idle mode. The drive is powered on, disks spinning, track following, unit ready to receive and respond to interface commands.

Operating mode. Continuous random cylinder selection and seek operation of the actuator with a dwell time at each cylinder. The seek rate for the drive is to be calculated as shown below:

- Dwell time = 0.5 x 60/RPM
- Seek rate = 0.4 / (Average seek time + Dwell time)

6.9 Identification labels

The following labels are affixed to every drive shipped from the drive manufacturing location in accordance with the appropriate hard disk drive assembly drawing

- A label containing the Western Digital logo and the part number
- A label containing the drive model number, the manufacturing date code, the formatted capacity, the place of manufacture, certification logos from various safety agencies (e.g., UL/CSA/CE/RCM, etc.)
- A bar code label containing the drive serial number
- A label containing the jumper pin description
- A user designed label per agreement

The above labels may be integrated with other labels.

6.10 Safety

6.10.1 UL and CSA standard conformity

The product is qualified per UL 62368-1, 2nd Edition and CAN/CSA No.62368-1-14 2nd Edition for Audio/video, information and communication technology equipment Part 1: Safety requirements.

The UL recognition or the CSA certification is maintained for the product life

The UL and C-UL certification mark is on the drive.

6.10.2 EU Safety standard conformity

The product is approved by TUV complying EN 62368-1 : 2014 standard.

6.10.3 Flammability

The printed circuit boards used in this product are made of material with the UL recognized flammability rating of V-1 or better. The flammability rating is marked or etched on the board. All other parts not considered electrical components are made of material with the UL recognized flammability rating of V-2 minimum.

6.10.4 Safe handling

The product is conditioned for safe handling regarding sharp edges and corners.

6.10.5 Substance restriction requirements

The product complies with the Directive 2011/65/EU and Directive (EU) 2015/863 on the restriction of the use of certain hazardous substances in electrical and electronic equipment (RoHS),
the Substances of Very High Concern (SVHC) updated candidates of European Union Regulation 1907/2006 on the Registration Evaluation Authorization and Restriction of Chemicals (REACH),
China RoHS Directive, Taiwan BSMI and with Halogen free requirements based on the electronics industry standard, IEC 61249-2-21 (http://www.iec.ch/).

6.10.6 Secondary circuit protection

The product contains both 5V and 12V over-current protection circuitry.

6.11 Electromagnetic compatibility

When installed in a suitable enclosure and exercised with a random accessing routine at maximum data rate, the drive meets the following worldwide EMC requirements:

- United States Federal Communications Commission (FCC) Code of Federal Regulations, Part 15 (Class B)
- EN 55032: Electromagnetic compatibility of multimedia equipment - Emission Requirements
- EN 55035: Electromagnetic compatibility of multimedia equipment - Immunity requirements

6.11.1 CE Mark

The product is declared to be in conformity with requirements of the following EC directives.

EMC Directive 2014/30/EU on electromagnetic compatibility.

RoHS Directive 2011/65/EU and (EU) 2015/863 on the restriction of the use of certain hazardous substances in electrical and electronic equipment

6.11.2 RCM Mark

The product complies with the standard of Electromagnetic compatibility of multimedia equipment – Emission requirements, EN 55032, which is required by Australian Communications and Media Authority.

6.11.3 BSMI Mark

The product complies with the Taiwan's EMC standard of information technology equipment – Radio disturbance characteristics – Limits and methods of measurement, CNS 13438 Class B.

6.11.4 KC Mark

The product complies with the Korean EMC standards of KS C 9832:2019 for Emission and KS C 9835:2019 for Immunity. The product is registered under Broadcasting and Communication Equipment.

6.12 Third Party Open-Source Licenses

This product may include or use the following open source software subject to the following open source licenses. If required by the applicable open source license, Western Digital may provide the open source code to you on request either electronically or on a physical storage medium for a charge covering the cost of performing such distribution, which may include the cost of media, shipping, and handling.
Each third-party component that may be included is listed below, followed by its associated license text.

Components:

Bzip2 1.0.8 : Bzip2 License
PCRE 8.45 : BSD 3-clause "New" or "Revised" License

Licenses:

BSD 3-clause "New" or "Revised" License
(PCRE 8.45)

Copyright (c) <YEAR>, <OWNER>
All rights reserved.

Redistribution and use in source and binary forms, with or without modification,
are permitted provided that the following conditions are met:

* Redistributions of source code must retain the above copyright notice, this
  list of conditions and the following disclaimer.

* Redistributions in binary form must reproduce the above copyright notice,
  this list of conditions and the following disclaimer in the documentation
  and/or other materials provided with the distribution.

* Neither the name of the <ORGANIZATION> nor the names of its contributors may
  be used to endorse or promote products derived from this software without
  specific prior written permission.

THIS SOFTWARE IS PROVIDED BY THE COPYRIGHT HOLDERS AND CONTRIBUTORS "AS IS" AND
ANY EXPRESS OR IMPLIED WARRANTIES, INCLUDING, BUT NOT LIMITED TO, THE IMPLIED
WARRANTIES OF MERCHANTABILITY AND FITNESS FOR A PARTICULAR PURPOSE ARE
DISCLAIMED. IN NO EVENT SHALL THE COPYRIGHT OWNER OR CONTRIBUTORS BE LIABLE FOR
ANY DIRECT, INDIRECT, INCIDENTAL, SPECIAL, EXEMPLARY, OR CONSEQUENTIAL DAMAGES
(INCLUDING, BUT NOT LIMITED TO, PROCUREMENT OF SUBSTITUTE GOODS OR SERVICES; LOSS
OF USE, DATA, OR PROFITS; OR BUSINESS INTERRUPTION) HOWEVER CAUSED AND ON ANY
THEORY OF LIABILITY, WHETHER IN CONTRACT, STRICT LIABILITY, OR TORT (INCLUDING
NEGLIGENCE OR OTHERWISE) ARISING IN ANY WAY OUT OF THE USE OF THIS SOFTWARE, EVEN
IF ADVISED OF THE POSSIBILITY OF SUCH DAMAGE.

Bzip2 License
(Bzip2 1.0.8)

bzip2 License
==========

This program, "bzip2", the associated library "libbzip2", and all documentation,
are copyright (C) 1996-2005 Julian R Seward. All rights reserved.

Redistribution and use in source and binary forms, with or without modification, are permitted provided that the following conditions are met:

1. Redistributions of source code must retain the above copyright notice, this list of conditions and the following disclaimer.

2. The origin of this software must not be misrepresented; you must not claim that you wrote the original software. If you use this software in a product, an acknowledgment in the product documentation would be appreciated but is not required.

3. Altered source versions must be plainly marked as such, and must not be misrepresented as being the original software.

4. The name of the author may not be used to endorse or promote products derived from this software without specific prior written permission.

THIS SOFTWARE IS PROVIDED BY THE AUTHOR "AS IS" AND ANY EXPRESS OR IMPLIED WARRANTIES, INCLUDING, BUT NOT LIMITED TO, THE IMPLIED WARRANTIES OF MERCHANTABILITY AND FITNESS FOR A PARTICULAR PURPOSE ARE DISCLAIMED. IN NO EVENT SHALL THE AUTHOR BE LIABLE FOR ANY DIRECT, INDIRECT, INCIDENTAL, SPECIAL, EXEMPLARY, OR CONSEQUENTIAL DAMAGES (INCLUDING, BUT NOT LIMITED TO, PROCUREMENT OF SUBSTITUTE GOODS OR SERVICES; LOSS OF USE, DATA, OR PROFITS; OR BUSINESS INTERRUPTION) HOWEVER CAUSED AND ON ANY THEORY OF LIABILITY, WHETHER IN CONTRACT, STRICT LIABILITY, OR TORT (INCLUDING NEGLIGENCE OR OTHERWISE) ARISING IN ANY WAY OUT OF THE USE OF THIS SOFTWARE, EVEN IF ADVISED OF THE POSSIBILITY OF SUCH DAMAGE.

Part 2. Interface specification

7 General

7.1 Introduction

This specification describes the interface of the SATA hard disk drive (HDD) that supports Host Managed Zones Feature set.

The interface conforms to the following working documents of Information technology with certain limitations described in Section 7.3 “Deviations from Standard”.

- Serial ATA International Organization: Serial ATA Revision 3.5
- Zoned Device ATA Command Set -2 (ZAC-2) revision 14

7.2 Terminology

Device Device indicates the SATA hard disk drive (HDD)

Host Host indicates the system to which the device is attached.

7.3 Deviations From Standard

The device conforms to the referenced specifications, with deviations described below.

Check Power Mode If the Extended Power Conditions feature set is disabled and the device is in Idle mode, Check Power Mode command returns FFh by Sector Count Register, instead of returning 80h. Refer to Section 12.1 for details.

COMRESET COMRESET response is not the same as that of Power On Reset. Refer to Section 10.1 for details.

COMRESET response time During 500ms from Power On Reset, COMINIT is not returned within 10ms as a response to COMRESET.

Streaming Commands When the device is in standby mode, Streaming Commands can’t be completed while waiting for the spindle to reach operating speed even if execution time exceeds specified CCTL (Command Completion Time Limit). The minimum CCTL is 50ms.CCTL is set to 50ms when the specified value is shorter than 50ms.

SCT Error Recovery Control When the device is in standby mode, any command where error recovery time limit is specified can’t be completed while waiting for the spindle to reach operating speed even if execution time exceeds specified recovery time limit. The minimum time limit is 6.5 second. When the specified time limit is shorter than 6.5 second, the issued command is aborted.

Storage Element Depopulation The DSN (Device Statistics Notification) feature set is not supported.

8 Registers

In Serial ATA, the host adapter contains a set of registers that shadow the contents of the traditional device registers, referred to as the Shadow Register Block. Shadow Register Block registers are interface registers used for delivering commands to the device or posting status from the device. About details, please refer to the Serial ATA Specification.

In the following cases, the host adapter sets the BSY bit in its shadow Status Register and transmits a FIS to the device containing the new contents.

1) Command register is written in the Shadow Register Block
2) Device Control register is written in the Shadow Register Block with a change of state of the SRST bit
3) COMRESET is requested

8.1 Alternate Status Register

Table 23 Alternate Status Register

Alternate Status Register							
7 BSY	6 RDY	5 DF	4 DSC/SERV	3 DRQ	2 COR	1 IDX	0 ERR

This register contains the same information as the Status Register. The only difference is that reading this register does not imply interrupt acknowledge or clear a pending interrupt. See Section 8.11 for the definition of the bits in this register.

8.2 Command register

This register contains the command code being sent to the device. Command execution begins immediately after this register is written. The command set is shown in Section 12.
All other registers required for the command must be set up before writing the Command Register.

8.3 Cylinder High Register

This register contains the high order bits of the starting cylinder address for any disk access. At the end of the command, this register is updated to reflect the current cylinder number.
This register contains LBA Bits 16-23. At the end of the command, this register is updated to reflect the current LBA Bits 16-23.
The cylinder number may be from zero to the number of cylinders minus one.
When 48-bit addressing commands are used, the “most recently written” content contains LBA Bits 16-23, and the “previous content” contains Bits 40-47. The 48-bit Address feature set is described in Section 10.11.

8.4 Cylinder Low Register

This register contains the low order bits of the starting cylinder address for any disk access. At the end of the command, this register is updated to reflect the current cylinder number.
This register contains LBA Bits 8-15. At the end of the command, this register is updated to reflect the current LBA Bits 8-15.
The cylinder number may be from zero to the number of cylinders minus one.
When 48-bit addressing commands are used, the “most recently written” content contains LBA Bits 8-15, and the “previous content” contains Bits 32-39.

8.5 Device Control Register

Table 24 Device Control Register

Device Control Register							
7	6	5	4	3	2	1	0
HOB	-	-	-	1	SRST	-IEN	0

Bit Definitions

HOB HOB (high order byte) is defined by the 48-bit Address feature set. A write to any Command Register shall clear the HOB bit to zero.

SRST (RST) Software Reset. The device is held reset when RST=1. Setting RST=0 re-enables the device.

The host must set RST=1 and wait for at least 5 microseconds before setting RST=0, to ensure that the device recognizes the reset.

-IEN Interrupt Enable. When –IEN=0, and the device is selected, device interrupts to the host will be enabled. When –IEN=1, or the device is not selected, device interrupts to the host will be disabled.

8.6 Device/Head Register

Table 25 Device/Head Register

Device/Head Register							
7	6	5	4	3	2	1	0
1	1	1	DRV	HS3	HS2	HS1	HS0

This register contains the device and head numbers.

Bit Definitions

DRV Device. This product ignores this bit.

HS3,HS2,HS1,HS0 Head Select. These four bits indicate binary encoded address of the head. HS0 is the least significant bit. At command completion, these bits are updated to reflect the currently selected head.

The head number may be from zero to the number of heads minus one.

HS3 through HS0 contain bits 24-27 of the LBA. At command completion, these bits are updated to reflect the current LBA bits 24-27.

8.7 Error Register

Table 26 Error Register

Error Register							
7	6	5	4	3	2	1	0
ICRCE	UNC	0	IDNF	0	ABRT	TK0NF	AMNF

This register contains status from the last command executed by the device, or a diagnostic code.

At the completion of any command except Execute Device Diagnostic, the contents of this register are valid always even if ERR=0 in the Status Register.
Following a power on, a reset, or completion of an Execute Device Diagnostic command, this register contains a diagnostic code. See Section 10.2 for the definition.

Bit Definitions

ICRCE (CRC) Interface CRC Error. ICRCE=1 indicates a CRC error occurred during FIS transmission or FIS reception.

UNC Uncorrectable Data Error. UNC=1 indicates an uncorrectable data error has been encountered.

IDNF (IDN) ID Not Found. IDN=1 indicates the requested sector's ID field could not be found.

ABRT (ABT) Aborted Command. ABT=1 indicates the requested command has been aborted due to a device status error or an invalid parameter in an output register.

TK0NF (T0N) Track 0 Not Found. T0N=1 indicates track 0 was not found during a Recalibrate command.

AMNF (AMN) Address Mark Not Found. This product does not report this error. This bit is always zero.

8.8 Features Register

This register is command specific. This is used with the Set Features command, SMART Function Set command, Format Unit command and Sanitize Device Feature Set command.

8.9 Sector Count Register

This register contains the number of sectors of data requested to be transferred on a read or write operation between the host and the device. If the value in the register is set to 0, a count of 256 sectors (in 28-bit addressing) or 65,536 sectors (in 48-bit addressing) is specified.
If the register is zero at command completion, the command was successful. If not successfully completed, the register contains the number of sectors which need to be transferred in order to complete the request.
The contents of the register are defined otherwise on some commands. These definitions are given in the command descriptions.

8.10 Sector Number Register

This register contains the starting sector number for any disk data access for the subsequent command.
The sector number is from one to the maximum number of sectors per track.
This register contains LBA Bits 0-7. At the end of the command, this register is updated to reflect the current LBA Bits 0-7.
When 48-bit commands are used, the “most recently written” content contains LBA Bits 0-7, and the “previous content” contains Bits 24-31.

8.11 Status Register

Table 27 Status Register

Status Register							
7	6	5	4	3	2	1	0
BSY	DRDY	DF	DSC/SERV	DRQ	CORR	IDX	ERR

This register contains the device status. The contents of this register are updated whenever an error occurs and at the completion of each command.

If the host reads this register when an interrupt is pending, it is considered to be the interrupt acknowledge. Any pending interrupt is cleared whenever this register is read.
If BSY=1, no other bits in the register are valid.

Bit Definitions

BSY Busy. BSY=1 whenever the device is accessing the registers. The host should not read or write any registers when BSY=1. If the host reads any register when BSY=1, the contents of the Status Register will be returned.

DRDY (RDY) Device Ready. RDY=1 indicates that the device is capable of responding to a command. RDY will be set to 0 during power on until the device is ready to accept a command. If the device detects an error while processing a command, RDY is set to 0 until the Status Register is read by the host, at which time RDY is set back to 1.

DF Device Fault. Used to indicate a hardware fault.

DSC Device Seek Complete. DSC=1 indicates that a seek has completed and the device head is settled over a track. DSC is set to 0 by the device just before a seek begins. When an error occurs, this bit is not changed until the Status Register is read by the host, at which time the bit again indicates the current seek complete status.

When the device enters into or is in Standby mode or Sleep mode, this bit is set by device in spite of not spinning up.

SERV (SRV) Service. This product does not support SERV bit.

DRQ Data Request. DRQ=1 indicates that the device is ready to transfer a word or byte of data between the host and the device. The host should not write the Command register when DRQ=1.

CORR (COR) Corrected Data. Always 0.

IDX Index. IDX=1 once per revolution. Since IDX=1 only for a very short time during each revolution, the host may not see it set to 1 even if the host is reading the Status Register continuously. Therefore, the host should not attempt to use IDX for timing purposes.

ERR Error. ERR=1 indicates that an error occurred during execution of the previous command. The Error Register should be read to determine the error type. The device sets ERR=0 when the next command is received from the host.

9 Normal and Error Output Field Descriptions

9.1 Overview

Normal and Error Out Field describes requirements for all commands. Individual commands may describe additional requirements.

The normal outputs (see ACS-5) and error outputs (see ACS-5) for each command include:

a) a one byte STATUS field (see Section 9.2);

b) a one byte ERROR field (see Section 9.3);

c) a COUNT field (see Section 9.4), SACTIVE field (see Section 9.5), and SATA STATUS field (see Section 9.6), if required, for certain commands (e.g., the READ FPDMA QUEUED command, Sanitize Device feature set commands, and WRITE FPDMA QUEUED command); and

d) a LBA field that may contain the LBA of First Unrecoverable Error (see Section 9.7.1).

e) Device Signatures field for Normal Output (see Section 9.9).

9.2 Status Field

9.2.1 Overview

The STATUS field is one byte and is conveyed as an output from the device to the host (see applicable transport standard). Each bit, when valid, is defined in the following table.

Table 28 STATUS field

Bit	Name	Reference
7	BUSY bit	9.2.3
6	DEVICE READY bit	9.2.6
5	DEVICE FAULT bit	9.2.5
4	N/A	
3	DATA REQUEST bit	9.2.4
2	ALIGNMENT ERROR bit	9.2.2
1	SENSE DATA AVAILABLE bit	9.2.8
0	ERROR bit	9.2.7

9.2.2 ALIGNMENT ERROR bit

The ALIGNMENT ERROR bit is set to one if:

a) the LOGICAL TO PHYSICAL SECTOR RELATIONSHIP SUPPORTED bit is set to one;
b) the LPS MISALIGNMENT REPORTING SUPPORTED bit is set to one;
c) the ALIGNMENT ERROR REPORTING field contains 01b or 10b; and
d) the device returns completion for a write command without an error where:
   A) the first byte of data transfer does not begin at the first byte of a physical sector; or
   B) the last byte of data transfer does not end at the last byte of a physical sector.

Otherwise, the ALIGNMENT ERROR bit is cleared to zero.

If an alignment error and another error occur during the processing of a write command, then the other error is returned and the alignment error is not reported in the STATUS field (i.e., the ALIGNMENT ERROR bit is cleared to zero). If an alignment error occurs, even if it is not reported in the STATUS field and there is space remaining in the LPS Mis-alignment log, then an entry must be made in the log.

9.2.3 BUSY bit

The BUSY bit is transport dependent (see Section 9.2.9). Refer to the applicable transport standard for the usage of the BUSY bit.

9.2.4 DATA REQUEST bit

The DATA REQUEST bit is transport dependent (see Section 9.2.9).Refer to the appropriate transport standard for the usage of the DATA REQUEST bit.

9.2.5 DEVICE FAULT bit

If the device is in a condition where continued operation may affect the integrity of user data on the device (e.g., failure to spin-up without error, or no spares remaining for reallocation), then the device does:

a) return command aborted with the DEVICE FAULT bit set to one in response to all commands (e.g., IDENTIFY DEVICE commands, IDENTIFY PACKET DEVICE commands) except REQUEST SENSE DATA EXT commands;
b) complete a REQUEST SENSE DATA EXT command without error with a sense key of HARDWARE ERROR with additional sense code of INTERNAL TARGET FAILURE (see SPC-4), if:
   A) the SENSE DATA SUPPORTED bit is set to one; and
   B) the REQUEST SENSE DEVICE FAULT SUPPORTED bit is set to one;

or

c) return command aborted with the DEVICE FAULT bit set to one in response to a REQUEST SENSE DATA EXT command, if:
   A) the SENSE DATA SUPPORTED bit is cleared to zero; or
   B) the SENSE DATA SUPPORTED bit is set to one and the REQUEST SENSE DEVICE FAULT SUPPORTED bit is cleared to zero.

Power cycling the device is the only mechanism that may clear the DEVICE FAULT bit to zero.
If the DEVICE FAULT bit has been cleared to zero, then it may remain clear until a command that affects user data integrity is received by the device.

9.2.6 DEVICE READY bit

The DEVICE READY bit is transport dependent (see Section 9.2.9). Refer to the applicable transport standard for the usage of the DEVICE READY bit.

9.2.7 ERROR bit

An ATA device shall set the ERROR bit to one if any bit in the ERROR field (see Section 9.3) is set to one. Otherwise, an ATA device shall clear the ERROR bit to zero.

9.2.8 SENSE DATA AVAILABLE bit

The SENSE DATA AVAILABLE bit shall be set to one if:

a) the SENSE DATA SUPPORTED bit is set to one;
b) the SENSE DATA ENABLED bit is set to one; and
c) the device has sense data to report after processing any command.

Otherwise, the SENSE DATA AVAILABLE bit shall be cleared to zero.
The ERROR bit and the SENSE DATA AVAILABLE bit may both be set to one.
Bit 1 of the STATUS field is obsolete if:

a) the SENSE DATA SUPPORTED bit is cleared to zero; or
b) the SENSE DATA ENABLED bit is cleared to zero.

9.2.9 Transport Dependent bits and fields

All bits and fields that are labelled transport dependent are defined in the transport standards.

9.3 ERROR Field

9.3.1 Overview

The ERROR field is one byte and is conveyed as an output from the device to the host (see applicable transport standard). Each bit, when valid, is defined in the following table.

Table 29 ERROR field

Bit	Name	Reference
7	INTERFACE CRC bit	Section 9.3.5
6	UNCORRECTABLE ERROR bit	Section 9.3.6
5	Obsolete	
4	ID NOT FOUND bit	Section 9.3.3
3	Obsolete	
2	ABORT bit	Section 9.3.2
1	Obsolete	
0	N/A	

9.3.2 ABORT bit

The ABORT bit is set to one if the device aborts the command. The ABORT bit is cleared to zero if the device does not abort the command.

If the host requested an address outside of the range of user addressable addresses, then:

a) the ID NOT FOUND bit (see Section 9.3.3) is set to one and the ABORT bit is cleared to zero; or
b) the ID NOT FOUND bit is cleared to zero and the ABORT bit is set to one.

If a user addressable address was not found (see Section 9.3.3, the ABORT bit is cleared to zero.

If the INTERFACE CRC bit (see Section 9.3.5) is set to one, the ABORT bit is set to one.

9.3.3 ID NOT FOUND bit

The ID NOT FOUND bit is set to one if:

a) a user-addressable address was not found; or

b) an address outside of the range of user-addressable addresses is requested and the ABORT bit (see Section 9.3.2) is cleared to zero.

Otherwise, the ID NOT FOUND bit is cleared to zero.

9.3.4 ILLEGAL LENGTH INDICATOR bit

The operation of the ILLEGAL LENGTH INDICATOR bit is specific to the SCSI command set implemented by ATAPI devices (e.g., devices defined by MMC-6).

9.3.5 INTERFACE CRC bit

The INTERFACE CRC bit is set to one if an interface CRC error occurred during an Ultra DMA data transfer.
The INTERFACE CRC bit is cleared to zero if an interface CRC error did not occur during an Ultra DMA data transfer.
The value of the INTERFACE CRC bit may be applicable to Multiword DMA transfers and PIO data transfers. If the INTERFACE CRC bit is set to one, the ABORT bit is set to one.

9.3.6 UNCORRECTABLE ERROR bit

The UNCORRECTABLE ERROR bit is set to one if the data contains an uncorrectable error. The UNCORRECTABLE ERROR bit is cleared to zero if the data does not contain an uncorrectable error.

9.4 COUNT Field

The COUNT field is an output from the device to the host. The use of the COUNT field depends on the command being processed. Commands may use the COUNT field to indicate:

a) the number of contiguous logical sectors that contain potentially bad data for commands in the Streaming feature set; or
b) the tag of an NCQ command for commands in the NCQ feature set.

9.5 SACTIVE Field

See ATA8-AST for a description of the SACTIVE field.

9.6 SATA STATUS Field

See ATA8-AST for a description of the SATA STATUS field (i.e., word 0 of the Set Device Bits FIS).

9.7 LBA Field

The LBA field is an output from the device to the host. The uses of the LBA field depend on the command being processed. Commands may use the LBA field to indicate the LBA of the first unrecovered error.

9.7.1 LBA of First Unrecoverable Error

For commands that return LBA of the first unrecoverable error, if an unrecoverable error was encountered prior to or during the processing of that command, then the LBA field contains the LBA of the first unrecoverable error.
This value does not provide any status information regarding any data transferred by the command that returned the error. The value may be outside the LBA range of the command that returned the error.

9.8 Sense Code Definition

This subclause describes the recommended sense data specified in the Error Outputs in Section 12. The methods for retrieving the sense data are described in the following subclauses:

a) Sense data reporting feature set;
b) Returning sense data for successful NCQ feature set commands;
c) NCQ Command Error log; and
d) NCQ Autosense.

The sense keys and additional sense code values are found in Section 13.

9.9 Device Signatures for Normal Output

Table 30 specifies the normal outputs for the READ SECTOR(S) command (see ACS-5), the IDENTIFY DEVICE command (see ACS-5), and the EXECUTE DEVICE DIAGNOSTIC command (see ACS-5).

Table 30 Device Signatures for Normal Output

Field	Description
ERROR	Diagnostic Results – The diagnostic code as described in Table 34 is returned. This field shall be reserved for the EXECUTE DEVICE DIAGNOSTIC command (see Section 12.7).
COUNT **LBA**	See Table 31
DEVICE	**Bit** **Description** 7 Obsolete 6 N/A 5 Obsolete 4 Transport Dependent – See ACS-5 3:0 Reserved
STATUS	**Bit** **Description** 7:6 Transport Dependent – See ACS-5 5 DEVICE FAULT bit – See ACS-5 4 N/A 3 Transport Dependent – See ACS-5 2 N/A 1 N/A 0 shall be cleared to zero

Table 31 Device signatures for COUNT and LBA field

Bits	ATA device	Reserved for SATA		Obsolete	
COUNT field (7:0)	01h	01h	01h	01h	N/A
LBA field (27:24)	Reserved	Reserved	Reserved	Reserved	Reserved
LBA field (23:16)	00h	C3h	96h	EBh	AAh
LBA field (15:8)	00h	3Ch	69h	14h	CEh
LBA field (7:0)	01h	01h	01h	01h	N/A

10 General Operation Descriptions

10.1 Reset Response

There are three types of resets in ATA as follows:

Power On Reset (POR) The device executes a series of electrical circuitry diagnostics.

COMRESET COMRESET is issued in Serial ATA bus.
The device resets the interface circuitry as well as Soft Reset.

Soft Reset (Software Reset) SRST bit in the Device Control Register is set, and then is reset.
The device resets the interface circuitry according to the Set Features requirement.

The actions of each reset are shown below.

Table 32 Reset Response

	POR	**COMRESET**	**Soft Reset**
Aborting Host interface	-	o	o
Aborting Device operation	-	o	o
Initialization of hardware	o	x	x
Internal diagnostic	o	x	x
Spinning spindle	(*5)	x	x
Initialization of registers (*1)	o	o	o
Reverting programmed parameters to default - Number of CHS (set by Initialize Device Parameter) - Multiple mode - Write cache - Read look-ahead - ECC bytes	o	(*2)	(*2)
Disable Standby timer	o	x	x
Power mode	(*4)	(*3)	(*3)

o ---- Executed
x ---- Not executed

Table Notes

(*1) Default value on POR is shown in Table 33 .

(*2) The Set Features command with Feature register = CCh enables the device to revert these parameters to the power on defaults.

(*3) In the case of Sleep mode, the device goes to Standby mode. In other case, the device does not change current mode.

(*4) Idle when Power-Up in Standby feature set is disabled. Standby when Power-Up in Standby feature set is enabled.

(*5) Spinning up when Power-Up in Standby feature set is disabled. Standby when Power-Up in Standby feature set is enabled.

10.1.1 Register Initialization

After power on, hard reset, or software reset, the register values are initialized as shown below.

Table 33 Default Register Values

Register	Default Value
Error	Diagnostic Code
Sector Count	01h
Sector Number	01h
Cylinder Low	00h
Cylinder High	00h
Device/Head	00h
Status	50h
Alternate Status	50h

The meaning of the Error Register diagnostic codes resulting from power on, hard reset or the Execute Device Diagnostic command are as shown below.

Table 34 Diagnostic Codes

Code	Description
01h	No error Detected
02h	Formatter device error
03h	Sector buffer error
04h	ECC circuitry error
05h	Controller microprocessor error

10.2 Diagnostic and Reset Considerations

In each case of Power on Reset, COMRESET, Soft reset, and EXECUTE DEVICE DIAGNOSTIC command, the device is diagnosed and the Error register is set as shown in Table 34.

10.3 Power Management Feature Set

The power management feature set allows an application client to modify the behavior of a device in a manner that reduces the power required to operate. The power management feature set provides a set of commands and a timer that enables a device to implement low power consumption modes.

The Power Management feature set implements the following set of functions.

1. A Standby timer
2. Check Power Mode
3. Idle command
4. Idle Immediate command
5. Sleep command
6. Standby command
7. Standby Immediate command

10.3.1 Power Mode

The lowest power consumption when the device is powered on occurs in Sleep Mode. When in sleep mode, the device requires a reset to be activated.
In Idle Mode the device is capable of responding immediately or with a small latency impact to media access requests.
In Active Mode the device is under executing a command or accessing the disk media with read look-ahead function or writes cache function.

10.3.1.1 Active Idle Mode

Servo is mostly off but heads are loaded. The spindle is rotated at the full speed.

10.3.1.2 Low Power Idle Mode

Additional electronics are powered off, and heads are unloaded on the ramp, however the spindle is still rotated at the full speed.

10.3.1.3 Low RPM Idle Mode

The heads are unloaded on the ramp, and the spindle is rotated at the 85-90% of the full speed.

10.3.1.4 Standby Mode

The device interface is capable of accepting commands, but as the media may not immediately accessible, there is a delay while waiting for the spindle to reach operating speed.

10.3.2 Power Management Commands

The Check Power Mode command allows a host to determine if a device is in, going, to or leaving standby or idle mode.
The Idle and Idle Immediate commands move a device to idle mode immediately from the active or standby modes. The idle command also sets the standby timer count and enables or disables the standby timer.
The Standby and Standby Immediate commands move a device to standby mode immediately from the active or idle modes. The standby command also sets the standby timer count and enables or disables the Standby timer.
The Sleep command moves a device to sleep mode. The device's interface becomes inactive after the device reports command completion for the sleep command. A device only transitions from sleep mode after processing hardware reset, a software reset.

10.3.3 Standby Timer

The standby timer provides a method for the device to automatically enter standby mode from either active or idle mode following a host programmed period of inactivity. If the device is in the active or idle mode, the device waits for the specified time period and if no command is received, the device automatically enters the standby mode.
If the value of SECTOR COUNT Register on Idle command or Standby command is set to 00h, the standby timer is disabled.

10.3.4 Interface Capability for Power Modes

Each power mode affects the physical interface as defined in the following table:

Table 35 Power conditions

Mode	BSY	RDY	Interface active	Media
Active	x	X	Yes	Active
Idle	0	1	Yes	Active
Standby	0	1	Yes	Inactive
Sleep	x	x	No	Inactive

Note: Ready (RDY) is not a power condition. A device may post ready at the interface even though the media may not be accessible.

10.4 SMART Feature Set

The intent of Self-monitoring, analysis, and reporting technology (SMART) is to protect user data and prevent unscheduled system downtime that may be caused by predictable degradation and/or fault of the device. By monitoring and storing critical performance and calibration parameters, SMART devices employ sophisticated data analysis algorithms to predict the likelihood of near-term degradation or fault condition. By alerting the host system of a negative reliability status condition, the host system can warn the user of the impending risk of a data loss and advise the user of appropriate action.

10.4.1 Attributes

Attributes are the specific performance or calibration parameters that are used in analyzing the status of the device. Attributes are selected by the device manufacturer based on that attribute's ability to contribute to the prediction of degrading or faulty conditions for that particular device. The specific set of attributes being used and the identity of these attributes is vendor specific and proprietary.

10.4.2 Attribute Values

Attribute values are used to represent the relative reliability of individual performance or calibration attributes. The valid range of attribute values is from 1 to 253 decimal. Higher attribute values indicate that the analysis algorithms being used by the device are predicting a lower probability of a degrading or faulty condition existing. Accordingly, lower attribute values indicate that the analysis algorithms being used by the device are predicting a higher probability of a degrading or faulty condition existing.

10.4.3 Attribute Thresholds

Each attribute value has a corresponding attribute threshold limit which is used for direct comparison to the attribute value to indicate the existence of a degrading or faulty condition. The numerical values of the attribute thresholds are determined by the device manufacturer through design and reliability testing and analysis. Each attribute threshold represents the lowest limit to which its corresponding attribute value can be equal while still retaining a positive reliability status. Attribute thresholds are set at the device manufacturer's factory and cannot be changed in the field. The valid range for attribute thresholds is from 1 through 253 decimal.

10.4.4 Threshold Exceeded Condition

If one or more attribute values, whose Pre-failure bit of their status flag is set, are less than or equal to their corresponding attribute thresholds, then the device reliability status is negative, indicating an impending degrading or faulty condition.

10.4.5 SMART Feature Set Commands

The SMART commands provide access to attribute values, attribute thresholds and other logging and reporting information.

10.4.6 Off-line Read Scanning

The device provides the off-line read scanning feature with reallocation. This is the extension of the off-line data collection capability. The device performs the entire read scan with reallocation for the marginal sectors to prevent the user data lost.
If interrupted by the host during the read scanning, the device services the host command.

10.4.7 Error Log

Logging of reported errors is supported. The device provides information on the last five errors that the device reported as described in SMART error log sector. The device may also provide additional vendor specific information on these reported errors. The error log is not disabled when SMART is disabled. Disabling SMART shall disable the delivering of error log information via the SMART READ LOG SECTOR command.
If a device receives a firmware modification, all error log data is discarded and the device error count for the life of the device is reset to zero.

10.4.8 Self-Test

The device provides the self-test features which are initiated by SMART Execute Off-line Immediate command. The self-test checks the fault of the device, reports the test status in Device Attributes Data and stores the test result in the SMART self-test log sector as described in SMART self-test log data structure. All SMART attributes are updated accordingly during the execution of self-test.
If interrupted by the host during the self-tests, the device services the host command.
If the device receives a firmware modification, all self-test log data is discarded.

10.5 Security Feature Set

Security Feature Set is a powerful security feature. With a device lock password, a user can prevent unauthorized access to hard disk device even if the device is removed from the computer. The following commands are supported for this feature.

Security Set Password	('F1'h)
Security Unlock	('F2'h)
Security Erase Prepare	('F3'h)
Security Erase Unit	('F4'h)
Security Freeze Lock	('F5'h)
Security Disable Password	('F6'h)

Execution of these commands is restricted for the Trusted Computing Group feature set. That is, these commands operate only in the state that is the Manufactured-Inactivate state by the Trusted Computing Group feature set. Moreover, these commands are aborted in the state that is activated to the Manufactured state by the Trusted Computing Group feature set.

10.5.1 Security Mode

Following security modes are provided.

Device Locked mode The device disables media access commands after power on. Media access commands are enabled by either a security unlock command or a security erases unit command.

Device Unlocked mode The device enables all commands. If a password is not set this mode is entered after power on, otherwise it is entered by a security unlock or a security erases unit command.

Device Frozen mode The device enables all commands except those which can update the device lock function, set/change password. The device enters this mode via a Security Freeze Lock command. The device cannot exit this mode until power off.

10.5.2 Security Level

Following security levels are provided.

High level security When the device lock function is enabled and the User Password is forgotten the device can be unlocked via a Master Password.

Maximum level security When the device lock function is enabled and the User Password is forgotten then only the Master Password with a Security Erase Unit command can unlock the device. Then user data is erased.

10.5.3 Password

This function can have 2 types of passwords as described below.

Master Password When the Master Password is set, the device does NOT enable the Device Lock Function, and the device can NOT be locked with the Master Password, but the Master Password can be used for unlocking the device locked.
Identify Device Information Word 92 contains the value of the Master Password Revision Code set when the Master Password was last changed. Valid values are 0001h through FFFEh.

User Password The User Password should be given or changed by a system user. When the User Password is set, the device enables the Device Lock Function, and then the device is locked on next power on reset or hard reset.

The system manufacturer/dealer who intends to enable the device lock function for the end users, must set the master password even if only single level password protection is required.

10.5.4 Operation Example

10.5.4.1 Master Password Setting

The system manufacturer/dealer can set a new Master Password from default Master Password using the Security Set Password command, without enabling the Device Lock Function.
The Master Password Revision Code is set to FFFEh as shipping default by the HDD manufacturer

10.5.4.2 User Password Setting

When a User Password is set, the device will automatically enter lock mode the next time the device is powered on.

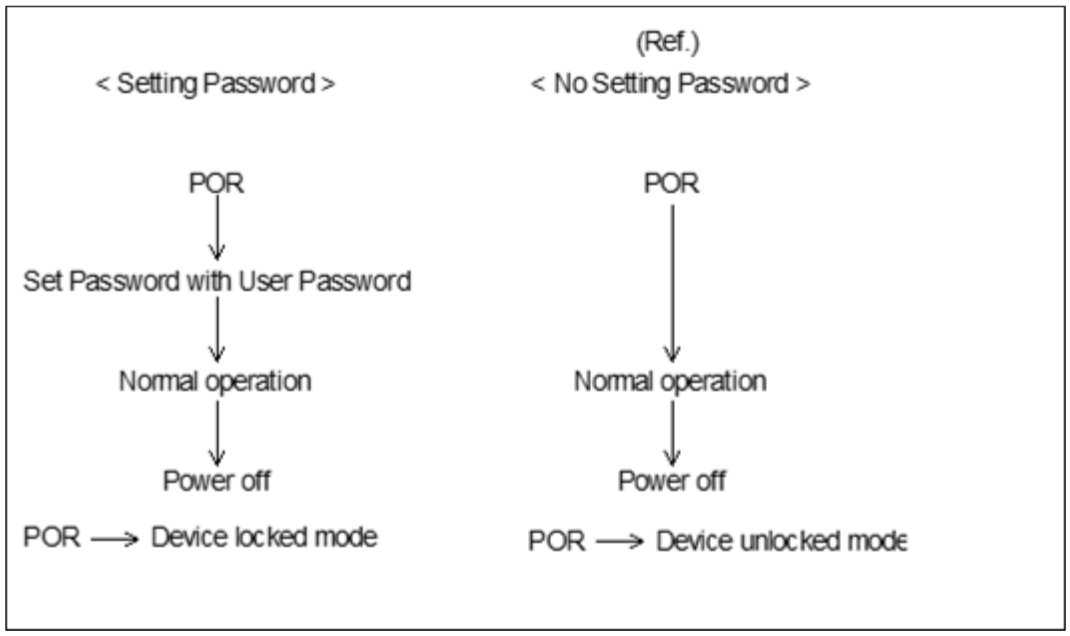

Figure 10 Initial Setting

10.5.4.3 Operation from POR after User Password is Set

When Device Lock Function is enabled, the device rejects media access command until a Security Unlock command is successfully completed.

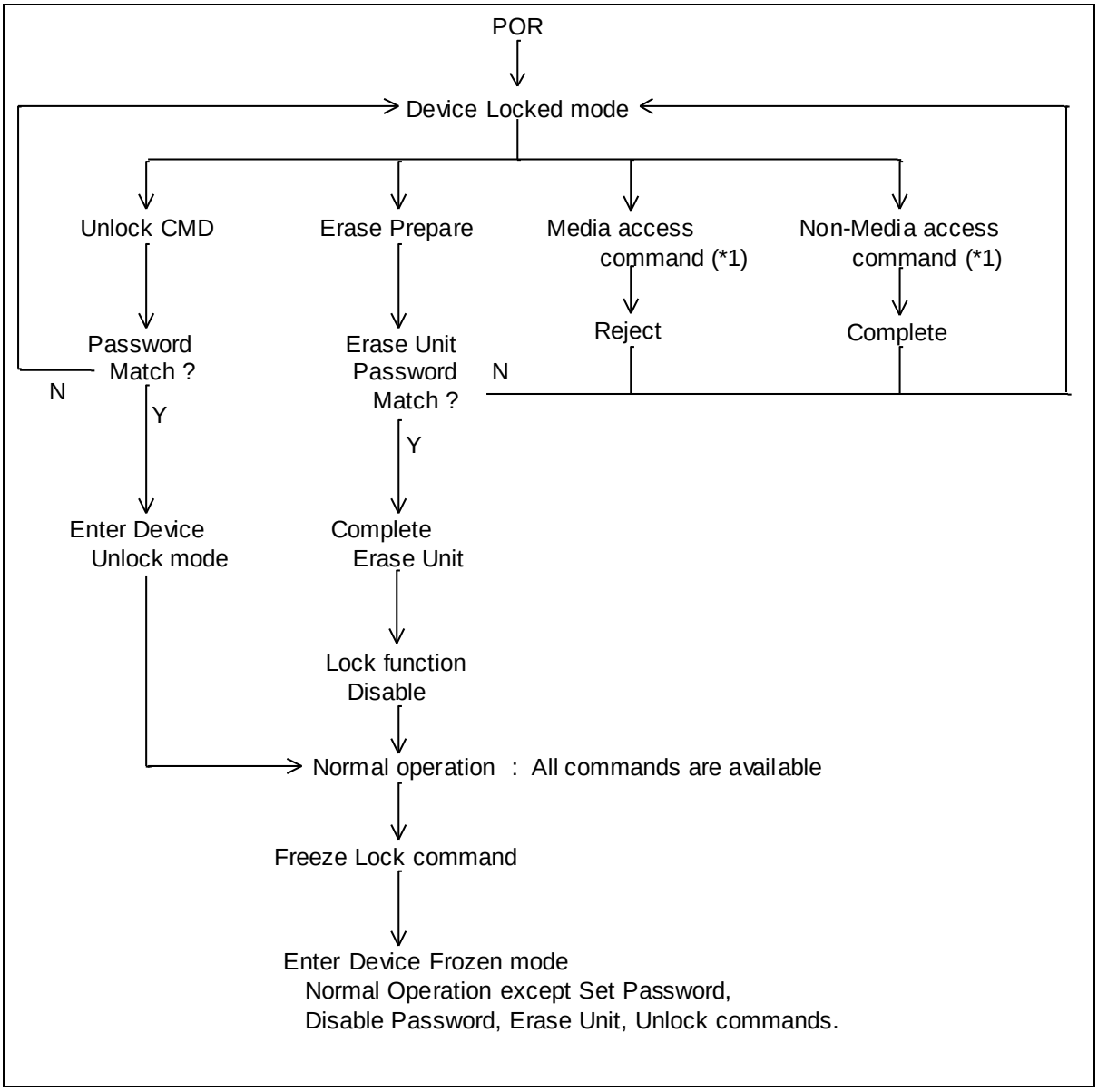

(*1) Refer to Section 10.5.5 on the page 74.

Figure 11 Usual Operation

10.5.4.4 User Password Lost

If the User Password is forgotten and High level security is set, the system user can't access any data. However, the device can be unlocked using the Master Password.

If a system user forgets the User Password and Maximum security level is set, data access is impossible. However, the device can be unlocked using the Security Erase Unit command to unlock the device and erase all user data with the Master Password.

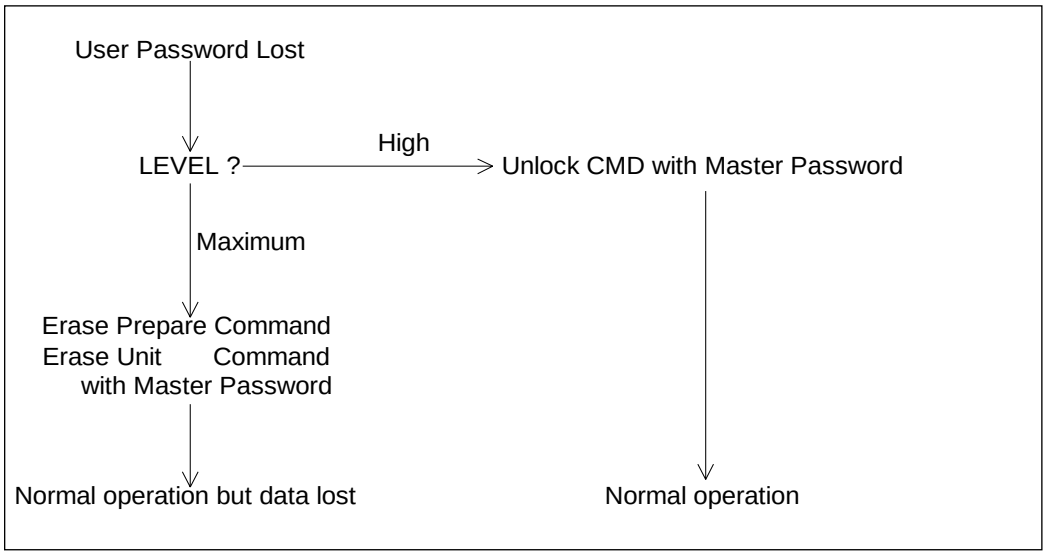

Figure 12 Password Lost

10.5.4.5 Attempt limit for SECURITY UNLOCK command

The SECURITY UNLOCK command has an attempt limit. The purpose of this attempt limit is to prevent that someone attempts to unlock the drive by using various passwords many times.

The device counts the password mismatch. If the password does not match, the device counts it up without distinguishing the Master password and the User password. If the count reaches 5, EXPIRE bit (bit 4) of Word 128 in Identify Device information is set, and then SECURITY ERASE UNIT command and SECURITY UNLOCK command are aborted until a hard reset or a power off. The count and EXPIRE bit are cleared after a power on reset or a hard reset.

10.5.5 Command Table

This table shows the device's response to commands when the Security Mode Feature Set (Device lock function) is enabled.

Table 36 Command table for device lock operation

Command	Locked Mode	Unlocked Mode	Frozen Mode
Check Power Mode	Executable	Executable	Executable
Close Zone Ext	Command aborted	Executable	Executable
Device Configuration Freeze Lock	Command aborted	Executable	Executable
Device Configuration Identify	Command aborted	Executable	Executable
Device Configuration Restore	Command aborted	Executable	Executable
Device Configuration Set	Command aborted	Executable	Executable
Download Microcode	Command aborted	Executable	Executable
Download Microcode DMA	Command aborted	Executable	Executable
Execute Device Diagnostic	Executable	Executable	Executable
Finish Zone Ext	Command aborted	Executable	Executable
Flush Cache	Command aborted	Executable	Executable
Flush Cache Ext	Command aborted	Executable	Executable
Format Unit	Command aborted	Executable	Executable
Get Physical Element Status	Executable	Executable	Executable
Identify Device	Executable	Executable	Executable
Idle	Executable	Executable	Executable
Idle Immediate	Executable	Executable	Executable
Initialize Device Parameters	Executable	Executable	Executable
NCQ Non-Data – Abort NCQ Queue	Executable	Executable	Executable
NCQ Non-Data – Deadline Handling	Executable	Executable	Executable
NCQ Non-Date – Set Features	Executable	Executable	Executable
NOP	Executable	Executable	Executable
Open Zone Ext	Command aborted	Executable	Executable
Read Buffer	Executable	Executable	Executable
Read Buffer DMA	Executable	Executable	Executable
Read DMA	Command aborted	Executable	Executable
Read DMA Ext	Command aborted	Executable	Executable
Read FPDMA Queued	Command aborted	Executable	Executable
Read Log Ext	Executable	Executable	Executable
Read Log DMA Ext	Executable	Executable	Executable
Read Multiple	Command aborted	Executable	Executable
Read Multiple Ext	Command aborted	Executable	Executable
Read Native Max Address	Executable	Executable	Executable
Read Native Max Address Ext	Executable	Executable	Executable
Read Sector(s)	Command aborted	Executable	Executable
Read Sector(s) Ext	Command aborted	Executable	Executable
Read Verify Sector(s)	Command aborted	Executable	Executable
Read Verify Sector(s) Ext	Command aborted	Executable	Executable
Recalibrate	Executable	Executable	Executable
Receive FPDMA Queued	Executable	Executable	Executable
Remove Element and Truncate	Command Aborted	Executable	Executable

Command	Locked Mode	Unlocked Mode	Frozen Mode
Report Zones Ext	Executable	Executable	Executable
Request Sense Data Ext	Executable	Executable	Executable
Reset Write Pointer Ext	Command aborted	Executable	Executable
Restore Elements and Rebuild	Command aborted	Executable	Executable
Sanitize Antifreeze Lock Ext	Command aborted	Executable	Executable
Sanitize Freeze Lock Ext	Command aborted	Executable	Executable
Sanitize Overwrite Ext	Command aborted	Executable	Executable
Sanitize Status Ext	Executable	Executable	Executable
SCT Write Same	Command aborted	Executable	Executable
SCT Error Recovery Control	Command aborted	Executable	Executable
SCT Feature Control	Command aborted	Executable	Executable
SCT Data Tables	Command aborted	Executable	Executable
Security Disable Password	Command aborted	Executable	Command aborted
Security Erase Prepare	Executable	Executable	Command aborted
Security Erase Unit	Executable	Executable	Command aborted
Security Freeze Lock	Command aborted	Executable	Executable
Security Set Password	Command aborted	Executable	Command aborted
Security Unlock	Executable	Executable	Command aborted
Seek	Executable	Executable	Executable
Send FPDMA Queued	Command aborted	Executable	Executable
Sense Condition	Executable	Executable	Executable
Set Date and Time Ext	Executable	Executable	Executable
Set Features	Executable	Executable	Executable
Set Max Address	Command aborted	Executable	Executable
Set Max Address Ext	Command aborted	Executable	Executable
Set Max Freeze Lock	Executable	Executable	Executable
Set Max Lock	Executable	Executable	Executable
Set Max Set Password	Executable	Executable	Executable
Set Max Unlock	Executable	Executable	Executable
Set Multiple Mode	Executable	Executable	Executable
Set Sector Configuration Ext	Command aborted	Executable	Executable
Sleep	Executable	Executable	Executable
SMART Disable Operations	Executable	Executable	Executable
SMART Enable/Disable Attribute Autosave	Executable	Executable	Executable
SMART Enable/Disable Automatic Off-Line	Executable	Executable	Executable
SMART Enable Operations	Executable	Executable	Executable
SMART Execute Off-line Immediate	Executable	Executable	Executable
SMART Read Attribute Values	Executable	Executable	Executable
SMART Read Attribute Thresholds	Executable	Executable	Executable
SMART Read Log	Executable	Executable	Executable
SMART Return Status	Executable	Executable	Executable
SMART Save Attribute Values	Executable	Executable	Executable
SMART Write Log	Executable	Executable	Executable
Standby	Executable	Executable	Executable
Standby Immediate	Executable	Executable	Executable
Trusted Receive	Command aborted	Executable	Executable

Command	Locked Mode	Unlocked Mode	Frozen Mode
Trusted Receive DMA	Command aborted	Executable	Executable
Trusted Send	Command aborted	Executable	Executable
Trusted Send DMA	Command aborted	Executable	Executable
Write Buffer	Executable	Executable	Executable
Write Buffer DMA	Executable	Executable	Executable
Write DMA	Command aborted	Executable	Executable
Write DMA Ext	Command aborted	Executable	Executable
Write DMA FUA Ext	Command aborted	Executable	Executable
Write FPDMA Queued	Command aborted	Executable	Executable
Write Log Ext	Command aborted	Executable	Executable
Write Log DMA Ext	Command aborted	Executable	Executable
Write Multiple	Command aborted	Executable	Executable
Write Multiple Ext	Command aborted	Executable	Executable
Write Multiple FUA Ext	Command aborted	Executable	Executable
Write Sector(s)	Command aborted	Executable	Executable
Write Sector(s) Ext	Command aborted	Executable	Executable
Write Uncorrectable Ext	Command aborted	Executable	Executable
Zone Activate Ext	Executable	Executable	Executable
Zone Query Ext	Executable	Executable	Executable

10.6 Host Protected Area Feature Set

Host Protected Area Feature is to provide the 'protected area' which cannot be accessed via conventional method. This 'protected area' is used to contain critical system data such as BIOS or system management information. The contents of entire system main memory may also be dumped into 'protected area' to resume after system power off. The LBA/CYL changed by following command affects the Identify Device Information. The following set of commands is implemented for this function.

Read Native Max Address	('F8'h)
Read Native Max Address Ext	('27'h)
Set Max Address	('F9'h)
Set Max Address Ext	('37'h)

10.6.1 Example for operation (In LBA mode)

Assumptions:
For better understanding, the following example uses actual values for LBA, size, etc. Since it is just an example, these values could be different.

Device characteristics

Capacity (native)	:	6,498,680,832	byte (6.4GB)
Max LBA (native)	:	12,692,735	(C1ACFFh)
Required size for protected area	:	206,438,400	byte
Required blocks for protected area	:	403,200	(062700h)
Customer usable device size	:	6,292,242,432	byte (6.2GB)
Customer usable sector count	:	12,289,536	(BB8600h)
LBA range for protected area	:	BB8600h to C1ACFFh	

1. Shipping HDDs from HDD manufacturer

   When the HDDs are shipped from HDD manufacturer, the device has been tested to have usable capacity of 6.4GB besides flagged media defects not to be visible by system.

2. Preparing HDDs at system manufacturer
   Special utility software is required to define the size of protected area and store the data into it.
   The sequence is:

   Issue Read Native Max Address command to get the real device maximum LBA. Returned value shows that native device Maximum LBA is 12,692,735 (C1ACFFh) regardless of the current setting.

   Make entire device be accessible including the protected area by setting device Maximum LBA as 12,692,735 (C1ACFFh) via Set Max Address command. The option could be either nonvolatile or volatile.

   Test the sectors for protected area (LBA >= 12,289,536 (BB8600h)) if required.

   Write information data such as BIOS code within the protected area.

   Change maximum LBA using Set Max Address command to 12,289,535 (BB85FFh) with nonvolatile option.

   From this point, the protected area cannot be accessed till next Set Max Address command is issued. Any Boise's, device drivers, or application software access the HDD as if that is the 6.2GB device because the device acts exactly the same as real 6.2GB device does.

3. Conventional usage without system software support
   Since the HDD works as 6.2GB device, there is no special care to use this device for normal use.

4. Advanced usage using protected area

The data in the protected area is accessed by following.

Issue Read Native Max Address command to get the real device maximum LBA. Returned value shows that native device Maximum LBA is 12,692,735 (C1ACFFh) regardless of the current setting.

Make entire device be accessible including the protected area by setting device Maximum LBA as 12,692,735 (C1ACFFh) via Set Max Address command with volatile option. By using this option, unexpected power removal or reset will not make the protected area remained accessible.

Read information data from protected area.

Issue hard reset or POR to inhibit any access to the protected area.

10.6.2 Security Extensions

1. Set Max Set Password
2. Set Max Lock
3. Set Max Freeze Lock
4. Set Max Unlock.

The Set Max Set Password command allows the host to define the password to be used during the current power on cycle. The password does not persist over a power cycle but does persist over a hardware or software reset. This password is not related to the password used for the Security Feature set. When the password is set the device is in the Set_Max_Unlocked mode. The Set Max Lock command allows the host to disable the Set Max commands (except set Max Unlock) until the next power cycle or the issuance and acceptance of the Set Max Unlock command. When this command is accepted the device is in the Set_Max_Locked mode. The Set Max Unlock command changes the device from the Set_Max_Locked mode to the Set_Max_Unlocked mode. The Set Max Freeze Lock command allows the host to disable the Set Max commands (including Set Max UNLOCK) until the next power cycle. When this command is accepted the device is in the Set_Max_Frozen mode.

The IDENTIFY DEVICE response Word 83, bit 8 indicates that this extension is supported if set, and Word 86, bit 8 indicate the Set Max security extension enabled if set.

10.7 Write Cache Function

Write cache is a performance enhancement whereby the device reports as completing the write command (Write Sector(s), Write Multiple and Write DMA) to the host as soon as the device has received all of the data into its buffer. And the device assumes responsibility to write the data subsequently onto the disk.

- While writing data after completed acknowledgment of a write command, soft reset or hard reset does not affect its operation. But power off terminates writing operation immediately and unwritten data are to be lost
- If an error occurs while the device is writing to the medium in a Sequential Write Required zone (see Section 10.21.4.3.2) and that error is reported as a deferred error (see ACS-5), then the device may invalidate cached user data for LBAs in that zone that are greater than the LBA reported with the deferred error. This invalidation may occur for data cached in both volatile and non-volatile caches.
- Soft reset, Standby (Immediate) command and Flush Cache commands are executed after the completion of cache flush to media. So the host system can confirm the completion of write cache operation by issuing Soft reset, Standby (Immediate) command or Flush Cache command to the device before power off.

10.8 Reassign Function

The reassign function is used with read commands and write commands. The sectors of data for reassignment are prepared as the spare data sector.
This reassignment information is registered internally, and the information is available right after completing the reassign function. The information is used on the next power on reset or hard reset.
If the number of the spare sector reaches 0 sectors, the reassign function will be disabled automatically.
The spare tracks for reassignment are located at regular intervals from Cylinder 0. As a result of reassignment, the physical location of logically sequenced sectors will be dispersed.

10.8.1 Auto Reassign Function

The sectors that show some errors may be reallocated automatically when specific conditions are met. The spare tracks for reallocation are located at regular intervals from Cylinder 0. The conditions for auto-reallocation are described below.

Non recovered write errors

When a write operation cannot be completed after the Error Recovery Procedure (ERP) is fully carried out, the sector(s) are reallocated to the spare location. An error is reported to the host system only when the write cache is disabled and the auto reallocation is failed.
If the write cache function is enabled, and when the number of available spare sectors reaches 0 sectors, both auto reassign function and write cache function are disabled automatically.

Non recovered read errors

When a read operation is failed after defined ERP is fully carried out, a hard error is reported to the host system. This location is registered internally as a candidate for the reallocation. When a registered location is specified as a target of a write operation, a sequence of media verification is performed automatically. When the result of this verification meets the criteria, this sector is reallocated.

Recovered read errors

When a read operation for a sector failed once then recovered at the specific ERP step, this sector of data is reallocated automatically. A media verification sequence may be run prior to the relocation according to the pre-defined conditions.

10.9 Power-up in Standby Feature Set

Power-Up In Standby feature set allows devices to be powered-up into the Standby power management state to minimize inrush current at power-up and to allow the host to sequence the spin-up of devices.
This feature set will be enabled/disabled via the SET FEATURES command. The enabling of this feature set shall be persistent after power cycle.
A device needs a SET FEATURES subcommand to spin-up to active state when the device has powered-up into Standby. The device remains in Standby until the SET FEATURES subcommand is received.
If power-up into Standby is enabled, when an IDENTIFY DEVICE is received while the device is in Standby as a result of powering up into Standby, the device shall set word 0 bit 2 to one to indicate that the response is incomplete, then only words 0 and 2 are correctly reported.
The IDENTIFY DEVICE information indicates the states as follows:

- identify device information is complete or incomplete
- this feature set is implemented
- this feature set is enabled or disabled
- the device needs the Set Features command to spin-up into active state

10.10 Advanced Power Management Feature Set (APM)

This feature allows the host to select an advanced power management level. The advanced power management level is a scale from the lowest power consumption setting of 01h to the maximum performance level of FEh. Device performance may increase with increasing advanced power management levels. Device power consumption may increase with increasing advanced power management levels. The advanced power management levels contain discrete bands, described in the SET FEATURES command section in detail. This feature set uses the following functions:

1. A SET FEATURES subcommand to enable Advanced Power Management
2. A SET FEATURES subcommand to disable Advanced Power Management

Advanced Power Management is independent of the Standby timer setting. If both Advanced Power Management and the Standby timer are set, the device will go to the Standby state when the timer times out or the device's Advanced Power Management algorithm indicates that the Standby state should be entered.

The IDENTIFY DEVICE response Word 83, bit 3 indicates that Advanced Power Management feature is supported if set. Word 86, bit 3 indicates that Advanced Power Management is enabled if set. Word 91, bits 7-0 contain the current Advanced Power Management level if Advanced Power Management is enabled.

10.11 48-bit Address Feature Set

The 48-bit Address feature set allows devices:

a) with capacities up to 281,474,976,710,655 logical sectors (i.e., up to 144,115,188,075,855,360 bytes for a 512-byte logical block device); and
b) to transfer up to 65536 logical sectors in a single command.

The 48-bit Address feature set operates in LBA addressing only. Devices also implement commands using 28-bit addressing, and 28-bit and 48-bit commands may be intermixed.

Support of the 48-bit Address feature set is indicated in the Identify Device response bit 10 words 83. In addition, the maximum user LBA address accessible by 48-bit addressable commands is contained in Identify Device response words 230 through 233.

When the 48-bit Address feature set is implemented, the native maximum address is the value returned by a Read Native Max Address Ext command. If the native maximum address is equal to or less than 268,435,455, a Read Native Max Address shall return the native maximum address. If the native maximum address is greater than 268,435,455, a Read Native Max Address shall return a value of 268,435,455.

10.12 SATA BIST (Built-in Self Test)

The device supports the following BIST modes and begins operations when it receives BIST Activate FIS.

F – Far End Analog Loopback.

L – Far End Retimed Loopback

T – Far End Transmit only

A – ALIGN Bypass (valid only in combination with T bit)

S – Bypass Scrambling (valid only in combination with T bit)

Note: The device does not support BIST functionality from the "Power Up in Standby" (PUIS) state. The device must first exit the PUIS state prior to performing any BIST operations.

10.13 SATA Interface Power Management

The device supports both receiving host-initiated interface power management requests and initiating interface power management. The device initiates interface power management when the device enters its power saving mode whose power consumption is lower than Idle mode.

10.14 Software Setting Preservation

When a device is enumerated, software will configure the device using SET FEATURES and other commands. These software settings are often preserved across software reset but not necessarily across hardware reset. In Parallel ATA, only commanded hardware resets can occur, thus legacy software only reprograms settings that are cleared for the particular type of reset it has issued. In Serial ATA, COMRESET is equivalent to hard reset and a non-commanded COMRESET may occur if there is an asynchronous loss of signal. Since COMRESET is equivalent to hardware reset, in the case of an asynchronous loss of signal some software settings may be lost without legacy software knowledge. In order to avoid losing important software settings without legacy driver knowledge, the software settings preservation ensures that the value of important software settings is maintained across a COMRESET. Software settings preservation may be enabled or disabled using SET FEATURES with a subcommand code of 06h. If a device supports software settings preservation, the feature shall be enabled by default.

10.14.1 COMRESET Preservation Requirements

The software settings that shall be preserved across COMRESET are listed below. The device is only required to preserve the indicated software setting if it supports the particular feature/command the setting is associated with.

INITIALIZE DEVICE PARAMETERS: Device settings established with the INITIALIZE DEVICE PARAMETERS command.

Power Management Feature Set Standby Timer: The Standby timer used in the Power Management feature set.

Read/Write Stream Error Log: The Read Stream Error Log and Write Stream Error Logs (accessed using READ LOG EXT and WRITE LOG EXT).

Security mode state: The security mode state established by Security Feature set commands (refer to Section 10.5). The device shall not transition to a different security mode state based on a COMRESET. For example, the device shall not transition from the SEC5: Unlocked / not Frozen state to state SEC4: Security enabled / Locked when a COMRESET occurs, instead the device shall remain in the SEC5: Unlocked / not Frozen state.

SECURITY FREEZE LOCK: The Frozen mode setting established by the SECURITY FREEZE LOCK command.

SECURITY UNLOCK: The unlock counter that is decremented as part of a failed SECURITY UNLOCK command attempt.

SET ADDRESS MAX (EXT): The maximum LBA specified in SET ADDRESS MAX or SET ADDRESS MAX EXT.

SET FEATURES (Device Initiated Interface Power Management): The Device Initiated Interface Power Management enable/disable setting (Word 79, bit 3 of Identify Device) established by the SET FEATURES command with a Subcommand code of 10h or 90h.

SET FEATURES (Write Cache Enable/Disable): The write cache enable/disable setting established by the SET FEATURES command with subcommand code of 02h or 82h.

SET FEATURES (Set Transfer Mode): PIO, Multiword, and UDMA transfer mode settings established by the SET FEATURES command with subcommand code of 03h.

SET FEATURES (Advanced Power Management Enable/Disable): The advanced power management enable/disable setting established by the SET FEATURES command with subcommand code of 05h or 85h. The advanced power management level established in the Sector Count register when advanced power management is enabled (SET FEATURES subcommand code 05h) shall also be preserved.

SET FEATURES (Read Look-Ahead): The read look-ahead enable/disable setting established by the SET FEATURES command with subcommand code of 55h or AAh.

SET FEATURES (Reverting to Defaults): The reverting to power-on defaults enable/disable setting established by the SET FEATURES command with a subcommand code of CCh or 66h.

SET MULTIPLE MODE: The block size established with the SET MULTIPLE MODE command.

SANITIZE FREEZE LOCK MODE: The Sanitize Frozen state established by the SANITIZE FREEZE LOCK EXT command.

10.15 Serial ATA Optional Features

The following optional features are supported.

10.15.1 Asynchronous Signal Recovery

The device supports asynchronous signal recovery.

10.15.2 Device Power Connector Pin 11 Definition

The device supports Pin 11 of the power connector which may be used to provide the host with an activity indication and disabling of staggered spin-up.

10.15.3 Phy Event Counters

Phy Event Counters are an optional feature to obtain more information about Phy level events that occur on the interface. This information may aid designers and integrators in testing and evaluating the quality of the interface. A device indicates whether it supports the Phy event counters feature in IDENTIFY DEVICE Word 76, bit 10. The host determines the current values of Phy event counters by issuing the READ LOG EXT command with a log page of 11h (See Section 12.25.8). The counter values shall not be retained across power cycles. The counter values shall be preserved across COMRESET and software resets.

The counters defined can be grouped into three basic categories: those that count events that occur during Data FIS transfers, those that count events that occur during non-Data FIS transfers, and events that are unrelated to FIS transfers. Counters related to events that occur during FIS transfers may count events related to host-to-device FIS transfers, device-to-host FIS transfers, or bi-directional FIS transfers. A counter that records bi-directional events is not required to be the sum of the counters that record the same events that occur on device-to-host FIS transfers and host-to-device FIS transfers.

Implementations that support Phy event counters shall implement all mandatory counters and may support any of the optional counters as shown in Table 163. Note that some counters may increment differently based on the speed at which non-Data FIS retries are performed by the host and device. Implementations may record CRC and non-CRC error events differently. For example, there is a strong likelihood that a disparity error may cause a CRC error. Thus, the disparity error may cause both the event counter that records non-CRC events and the event counter that records CRC events to be incremented for the same event. Another example implementation difference is how a missing EOF event is recorded; a missing EOF primitive may imply a bad CRC even though the CRC on the FIS may be correct. These examples illustrate that some Phy event counters are sensitive to the implementation of the counters themselves, and thus these implementation sensitive counters cannot be used as an absolute measure of interface quality between different implementations.

10.15.4 NCQ Non-Data (63h)

The NCQ Non-Data feature allows the host to manage the outstanding NCQ commands and/or affect the processing of NCQ commands. Only specified NCQ Non-Data subcommands are executed as Immediate NCQ commands.
If NCQ is disabled and an NCQ Non-Data command is issued to the device, then the device aborts the command with the ERR bit set to one in the Status register and the ABRT bit set to one in the Error register. This command is prohibited for devices that implement the PACKET feature set. The queuing behavior of the device depends on which subcommand is specified.

Table 37 NCQ Non-Data – Command definition

Register	**7**	**6**	**5**	**4**	**3**	**2**	**1**	**0**
Features(7:0)	Subcommand Specific				Subcommand			
Features(15:8)	Subcommand Specific							
Count(7:0)	TAG					Reserved		
Count(15:8)	Subcommand Specific							
LBA(7:0)	Subcommand Specific							
LBA(15:8)	Subcommand Specific							
LBA(23:16)	Subcommand Specific							
LBA(31:24)	Subcommand Specific							
LBA(39:32)	Subcommand Specific							
LBA(47:40)	Subcommand Specific							
ICC(7:0)	Reserved							
Auxiliary(7:0)	Reserved							
Auxiliary(15:8)	Reserved							
Auxiliary(23:16)	Subcommand Specific							
Auxiliary(31:24)	Reserved							
Device(7:0)	Res	1	Res	0	Reserved			
Command(7:0)	63h							

Table 38 defines the Subcommand values. If an invalid subcommand is specified, then the device aborts the command with the ERR bit set to one in the Status register, the ABRT bit set to one in the Error register and causes all outstanding commands to be aborted.

Table 38 Subcommand Field

Subcommand	**Description**	**Reference**
0h	Abort NCQ queue	12.17.1
1h	Deadline Handling	12.17.2
2h - 4h	Reserved	-
5h	Set Features	12.17.3
6h	Reserved	-
7h	ZAC Management Out	
8h..Fh	Reserved	-

Subcommand Specific (TTAG) is the selected queue TAG. This allows the host to select the specific outstanding queued command to be managed.

The error and normal returns for this command are subcommand specific.

10.15.4.1 Abort NCQ Queue Subcommand (0h)

A Subcommand set to 0h specifies the Abort NCQ Queue subcommand (see Section 12.17.1). The Abort NCQ Queue subcommand is an immediate NCQ command. Support for this subcommand is indicated in the NCQ Non-Data log (see Section 12.25.9).
The Abort NCQ Queue subcommand affects only those NCQ commands for which the device has indicated command acceptance before accepting this NCQ Non-Data command.
This command is prohibited for devices that implement the PACKET feature set.

Normal Outputs
If a supported Abort Type parameter is specified, then the device indicates success, even if the command results in no commands being aborted.
When an Abort NCQ Queue command completes successfully, a Set Device Bits FIS is sent to the host to complete the Abort subcommand and commands that were aborted as a consequence of the Abort subcommand by setting the ACT bits for those commands to one. This SDB FIS may also indicate other completed commands.

Error Outputs
The device returns command aborted if:

a) NCQ is disabled and an Abort NCQ queue command is issued to the device;
b) The value of the TTAG field equals the value of the TAG field;
c) The value of the TTAG field is an invalid TAG number; or
d) An unsupported Abort type parameter is specified.

10.15.4.2 Deadline Handling Subcommand (1h)

A Subcommand set to 1h specifies the Deadline Handling Subcommand (see Section 12.17.2). This subcommand controls how NCQ Streaming commands are processed by the device. Support for this subcommand is indicated in the NCQ Non-Data Log (see Section 12.25.9).
The state of the WDNC and RDNC bits are preserved across software resets and COMRESETs (via Software Setting Preservations) and are not preserved across power cycles.

Normal Outputs
If this Deadline Handling Subcommand command is supported, the device returns command completed with no error. When a Deadline Handling Subcommand command completes successfully, a Set Device Bits FIS is sent to the host to complete the Deadline Handling subcommand. This SDB FIS may also indicate other completed commands.

Error Outputs
The device returns command aborted if NCQ is disabled and a Deadline Handling command is issued to the device;

SET FEATURES Subcommand (5h)
The SET FEATURES subcommand functionality and behavior is dependent on all requirements of the SET FEATURES command defined in ACS-3.

Normal Outputs
Upon successful completion of one or more outstanding commands, the device shall transmit a Set Device Bits FIS with the Interrupt bit set to one and one or more bits set to one in the ACT field corresponding to the bit position for each command TAG that has completed since the last status notification was transmitted. The ERR bit in the Status register shall be cleared to zero and the value in the Error register shall be zero.

Error Outputs
If the device has received a command that has not yet been acknowledged by clearing the BSY bit to zero and an error is encountered, the device shall transmit a Register Device to Host FIS (see Table 127) with the ERR bit set to one and the BSY bit cleared to zero in the Status field, the ATA error code in the Error field.

See Section 12.25.9 for details on the NCQ Non-Data Log

10.16 Rebuild Assist Feature Set

The Rebuild Assist mode provides a method for a host controlling the rebuild process to determine that logical sectors on the failed device are unreadable without having to read every LBA to determine the unreadable logical sectors (i.e., the read command is terminated with an error and the failed LBA is reported in the sense data).
The storage array controller then may reconstruct the failed logical sectors.
The remaining logical sectors may be copied to the replacement device.

If the Rebuild Assist feature is enabled, then the host should issue sequential READ FPDMA QUEUED commands to extract the available data from the device.
If a READ FPDMA QUEUED command does not detect an unrecovered error, then the command should complete without error.

The Rebuild Assist feature allows reporting of an unrecovered read error or an unrecovered write error that is either predicted (i.e., a predicted unrecovered error) or unpredicted (i.e., an unpredicted unrecovered error).
If a device processes a READ FPDMA QUEUED command with the RARC bit set to one, then Rebuild Assist feature shall not affect processing of the READ FPDMA QUEUED command.

If the device processes a READ FPDMA QUEUED command with the RARC bit cleared to zero and detects a predicted unrecovered error, the following information recorded in the Queued Error log.

a) The Sense Key field is set to Bh (ABORTED COMMAND);
b) The Additional Sense Code field and the Additional Sense Code Qualifier field is set to 1103h (MULTIPLE READ ERRORS);
c) The LBA field is set to the LBA of the first unrecovered logical sector; and
d) The Final LBA In Error field is set to the LBA of the last predicted unrecovered logical sector in a sequence of contiguous unrecovered logical sectors that started with the first LBA in error.

See Section 12.25.11 for details on the Rebuild Assist Log

10.16.1 Enabling the Rebuild Assist Feature

If the host writes to the Rebuild Assist log and sets the Rebuild Assist Enabled field to one, then:
a) The device will initiate a self-test of the physical elements contained within the device and should disable any physical elements that are not functioning correctly;
b) The device shall initialize the Disabled Physical Elements from the results of the self-test;
c) The device shall minimize device-initiated background activities; and
d) The device shall enable the Rebuild Assist feature. The host may verify that Rebuild Assist feature is enabled by reading the Rebuild Assist log, and then examining the data returned and verifying that the Rebuild Assist Enabled field is set to one

10.16.2 Using the Rebuild Assist Feature Overview

If the Rebuild Assist feature is enabled, then the host should issue sequential READ FPDMA QUEUED commands to extract the available data from the device. If a READ FPDMA QUEUED command does not detect an unrecovered error, then the command should complete without error.
The Rebuild Assist feature allows reporting of an unrecovered read error or an unrecovered write error that is either predicted (i.e., a predicted unrecovered error) or unpredicted (i.e., an unpredicted unrecovered error). If a device processes a READ FPDMA QUEUED command with the RARC bit set to one, then Rebuild Assist feature shall not affect processing of the READ FPDMA QUEUED command.

10.16.3 Disabling the Rebuild Assist Feature

If the device supports the Rebuild Assist feature (i.e., IDENTIFY DEVICE data Word 78 bit 11 is set to one), then
The Rebuild Assist feature shall be disabled if:

a) The device processes a power cycle; or
b) The device processes a command to write to the Rebuild Assist log (see Section 13.7.8) with the Rebuild Assist Enabled bit cleared to zero.

10.17 SCT Command Transport Feature Set

10.17.1 Overview

10.17.1.1 Introduction

SMART Command Transport (SCT) is the method for the drive to receive commands using log page E0h and transporting data using log page E1h. These log pages are used as follows:

Table 39 SCT Log Page and direction

	Log page E0h	**Log Page E1h**
Write log page	Issue Command	Send Data to the drive
Read log page	Return Status	Received Data from the drive

There are two ways to access the log pages: using SMART READ/WRITE LOG and READ/WRITE LOG EXT. Both sets of commands access the same log pages and provide the same capabilities.

The log directory for log pages E0h and E1h should report a length of one. The length of log page E1h does not indicate the length of an SCT data transfer.

If SMART is supported, but not enabled, the drive supports SMART READ/WRITE LOG for Log page E0h and E1h.

If security is enabled and password has not been issued to unlock the device, all SCT commands will fail.

10.17.1.2 Capability Definition

Capability Identification is performed by issuing Identify Device command. Word 206 of Identify Data is used to determine if SCT is enabled and which SCT Action Codes are supported.

Table 40 Identify Device Information Word 206

Word	**Description**	
206	SCT Command set support	
	15-12	Vendor Specific
	11-6	Reserved
	5	Action Code 5 (SCT Data Table) supported
	4	Action Code 4 (Features Control) supported
	3	Action Code 3 (Error Recovery Control) supported
	2	Action Code 2 (SCT Write Same) supported
	1	Obsolete
	0	SCT Feature Set supported (includes SCT status)

10.17.1.3 SCT Command Nesting and Intermingling with Standard Commands

In general, standard ATA commands can be intermingled with SCT Commands but SCT commands cannot be nested. SCT commands that do require a follow-on data transfer operation never have an issue with being intermixed with any ATA commands or each other. SCT commands that do require data transfer, on the other hand, may not be nested; that is, if a key command that requires a data transfer is issued, all data transfer – to or from the host – must complete before another SCT command is issued. In most cases, however, ATA read/write commands may be inserted in between SCT data transfers, that is, between complete SMART Read Log/Write Log commands. Furthermore, any reset (power-on, software or hardware) will cause the SCT command to be aborted.

10.17.1.4 Resets

If an SCT command is executing, any reset including Soft Reset, Hard Reset, COMRESET, and Power-On Reset all cause the command to be terminated. This could result in partial command execution or data loss. There is no indication once the drive becomes ready that the previous command was terminated.

10.17.2 SCT Command Protocol

10.17.2.1 Command Transport

SCT Command Transport occurs when a 512-byte data packet (called “Key Sector”) is created and the written to SMART or extended log page E0h. The key sector specifies Action and Function Codes along with the parameters that are required to perform the action.

10.17.2.1.1 Issue SCT Command Using SMART

Table 41 Output Registers of SCT Command Using SMART

Command Block Output Registers								
Register	7	6	5	4	3	2	1	0
Feature	D6h							
Sector Count	01h							
Sector Number	E0h							
Cylinder Low	4Fh							
Cylinder High	C2h							
Device/Head	-	-	-	D	-	-	-	-
Command	B0h							

Table 42 Input Registers of SCT Command Using SMART

Command Block Input Registers (Success)								
Register	7	6	5	4	3	2	1	0
Error	00h							
Sector Count	Depends on command (LSB)							
Sector Number	Depends on command (MSB)							
Cylinder Low	Number of sectors to transfer (LSB)							
Cylinder High	Number of sectors to transfer (MSB)							
Device/Head	-	-	-	-	-	-	-	-
Status	50h							

Command Block Input Registers (Error)								
Register	7	6	5	4	3	2	1	0
Error	04h							
Sector Count	Extended Status code (LSB)							
Sector Number	Extended Status code (MSB)							
Cylinder Low	Number of sectors to transfer (LSB)							
Cylinder High	Number of sectors to transfer (MSB)							
Device/Head	-	-	-	-	-	-	-	-
Status	51h							

10.17.2.1.2 Issue SCT Command Using Write Log Ext

Table 43 Output Registers of SCT Command Using Write Log Ext

Command Block Output Registers									
Register		7	6	5	4	3	2	1	0
Feature	Current	Reserved							
	Previous	Reserved							
Sector Count	Current	01h							
	Previous	00h							
LBA Low	Current	E0h							
	Previous	Reserved							
LBA Mid	Current	00h							
	Previous	00h							
LBA High	Current	Reserved							
	Previous	Reserved							
Device/Head		-	-	-	D	-	-	-	-
Command		3Fh							

Table 44 Input Registers of SCT Command Using Write Log Ext

Command Block Input Registers (Success)									
Register		7	6	5	4	3	2	1	0
Error		00h							
Sector Count	HOB=0	Depends on command (LSB)							
	HOB=1	Reserved							
LBA Low	HOB=0	Depends on command (MSB)							
	HOB=1	Reserved							
LBA Mid	HOB=0	Number of sectors (LSB)							
	HOB=1	Reserved							
LBA High	HOB=0	Number of sectors (MSB)							
	HOB=1	Reserved							
Device/Head		-	-	-	-	-	-	-	-
Status		50h							

Command Block Input Registers (Error)									
Register		7	6	5	4	3	2	1	0
Error		04h							
Sector Count	HOB=0	Extended Status Code (LSB)							
	HOB=1	Reserved							
LBA Low	HOB=0	Extended Status Code (MSB)							
	HOB=1	Reserved							
LBA Mid	HOB=0	Number of sectors (LSB)							
	HOB=1	Reserved							
LBA High	HOB=0	Number of sectors (MSB)							
	HOB=1	Reserved							
Device/Head		-	-	-	-	-	-	-	-
Status		51h							

All ATA “previous” registers are reserved in Write Log Ext responses.

10.17.2.1.3 Key Sector Format

An SCT command (Key Sector) is always 512 bytes long. Table below shows the generic format of an SCT command.

Table 45 Key Sector Format

Byte	Field	Words	Description
1:0	Action Code	1	This field defines the command type and generally specifies the type of data being accessed, such as sector or physical action being performed, such as seek.
3:2	Function Code	1	This field specifies the type of access and varies by command. For example, this can specify read, write, verify, etc.
X:4	Parameter1	Depends on command	Depends on command
Y:x+1	Parameter2	Depends on command	Depends on command
…	…	…	…
	Total Words	256	

The action codes are defined in Table below.

Table 46 SCT Action Code List

Action Code	Block Data	TF Data	Description
0000h	-	-	Reserved
0001h	Read/Write	Y	Long Sector Access (Not Supported)
0002h	Write	N	SCT Write Same
0003h	-	Y	Error Recovery Control
0004h	-	Y	Features Control
0005h	Read	N	SCT Data Table
0006h-BFFFh	-	-	Reserved
C000h-FFFFh	-	-	Vendor Specific

10.17.2.1.4 Extended Status Code

Table 47 Extended Status Code

Status Code	Definition
0000h	Command completes without error
0001h	Invalid Function Code
0002h	Input LBA out of range
0003h	Request sector count overflow. The number of sectors requested to transfer (Sector Count register) in the read or write log command is larger than required by SCT command.
0004h	Invalid Function code in Error Recovery command
0005h	Invalid Selection code in Error Recovery command
0006h	Host read command timer is less than minimum value
0007h	Host write command timer is less than minimum value
0008h	Background SCT command was aborted because of an interrupting host command
0009h	Background SCT command was terminated because of unrecoverable error
000Ah	Invalid Function code in Long Sector Access command
000Bh	SCT data transfer command was issued without first issuing an SCT command
000Ch	Invalid Function code in Feature Control command
000Dh	Invalid Feature code in Feature Control command
000Eh	Invalid New State value in Feature Control command
000Fh	Invalid Option Flags in Feature Control command
0010h	Invalid SCT Action code
0011h	Invalid Table ID (table not supported)
0012h	Command was aborted due to drive security being locked
0013h	Invalid revision code
0014h	Foreground SCT operation was terminated because of unrecoverable error
0015h	The most recent non-SCT command returned command completion with an error due to the SCT Error Recovery Control Read Command Timer or SCT Error Recovery Control Write Command Timer expiring
0016h-BFFFh	Reserved
C000h-C014h	Vendor Specific
C015h	Waiting for the host to send data
C016h-FFEFh	Vendor Specific
FFF0h-FFFEh	Reserved
FFFFh	SCT command executing in background

10.17.2.2 Data Transfer

Once an SCT command has been issued, status can be checked and data can be transferred. Data transfer uses log page E1h.

10.17.2.2.1 Read/Write SCT Data Using SMART

Table 48 Input Registers of SCT Data Transfer Using SMART

Command Block Output Registers									
Register		7	6	5	4	3	2	1	0
Feature		D5h(Read)/D6h(Write)							
Sector Count		Number of sectors to be transferred							
Sector Number		E1h							
Cylinder Low		4Fh							
Cylinder High		C2h							
Device/Head		-	-	-	D	-	-	-	-
Command		B0h							

10.17.2.2.2 Read/Write SCT Data Using Read/Write Log Ext

Table 49 Input Registers of SCT Data Transfer using Read/Write Log Ext

Command Block Output Registers									
Register		7	6	5	4	3	2	1	0
Feature	Current	Reserved							
	Previous	Reserved							
Sector Count	Current	01h or 08h							
	Previous	00h							
LBA Low	Current	E1h							
	Previous	Reserved							
LBA Mid	Current	00h							
	Previous	00h							
LBA High	Current	Reserved							
	Previous	Reserved							
Device/Head		-	-	-	D	-	-	-	-
Command		2Fh(Read)/3Fh(Write)							

10.17.2.3 SCT Status Request

Once an SCT command has been issued, a status is reported in the ATA registers. This status indicates that the command was accepted or that an error occurred. This ATA status return does not indicate successful completion of the SCT actions. Some commands can take several minutes or even hours to execute. In this case, the host can determine execution progress by requesting SCT status.

Log page E0h contains the status information. Reading log page E0h retrieves the status information. The SCT status may be acquired any time that the host is allowing to send a command to the device. This command will not change the power state of the drive, nor terminate any background activity, including any SCT command in progress.

10.17.2.3.1 SCT Status Request Using SMART

Table 50 Input Registers of SCT Status Request Using SMART

Command Block Output Registers									
Register		7	6	5	4	3	2	1	0
Feature		D5h							
Sector Count		01h							
Sector Number		E0h							
Cylinder Low		4Fh							
Cylinder High		C2h							
Device/Head		-	-	-	D	-	-	-	-
Command		B0h							

10.17.2.3.2 SCT Status Request Using Read Log Ext

Table 51 Input Registers of SCT Status Request Using Read Log Ext

Command Block Output Registers									
Register		7	6	5	4	3	2	1	0
Feature	Current	Reserved							
	Previous	Reserved							
Sector Count	Current	01h							
	Previous	00h							
LBA Low	Current	E0h							
	Previous	Reserved							
LBA Mid	Current	00h							
	Previous	00h							
LBA High	Current	Reserved							
	Previous	Reserved							
Device/Head		-	-	-	D	-	-	-	-
Command		2Fh							

10.17.2.3.3 Format of SCT Status Response

Table 52 Data Format of SCT Status Response

Byte	Type	Field Name	Value	Description
1:0	Word	Format Version	0003h	Status Response format version number
3:2	Word	SCT Version		Manufacturer's vendor specific implementation version number
5:4	Word	SCT Spec.	0001h	Highest level of SCT Technical Report supported
9:6	Dword	Status Flags		Bit 0: Segment Initialized Flag If this bit is set to 1, an SCT Write Same command write to all LBAs of the drive has completed without error. This bit shall be cleared to 0 when any user LBA is written, even if write cache is enabled. This bit is else cleared if the capacity of the drive is changed via SETMAX, SETMAX EXT or DCO. This bit is preserved through a power cycle. Bit 1-31: Reserved
10	Byte	Drive Status		0 = Active waiting for a command 1 = Stand-by 2 = Sleep 3 = DST executing in background 4 = SMART ODC executing in background 5 = SCT executing in background
13:11	Byte[3]	Reserved	00h	
15:14	Word	Extended Status Code		Status Of last SCT command issued. FFFFh if SCT command executing in background.
17:16	Word	Action Code		Action code of last SCT command issued. If the Extended Status Code is FFFFh, this is the Action Code of the command that is current executing.
19:18	Word	Function Code		Function code of last SCT command issued. If the Extended Status Code is FFFFh, this is the Function Code of the command that is current executing.
39:20	Byte[20]	Reserved	00h	
47:40	Qword	LBA		Current LBA of SCT command execution in background. If there is no command currently executing in the background, this field is undefined.
199:48	Byte[152]		00h	
200	Byte	HDA Temp		Current HDA temperature in degrees Celsius. This is a 2's complement number. 80h indicates that this value is invalid.
201	Byte	Min Temp		Minimum HDA temperature in degrees Celsius. This is a 2's complement integer. 80h indicates that this value is invalid.
202	Byte	Max Temp		Maximum HDA temperature in degrees Celsius. This is a 2's complement number. 80h indicates that this value is invalid.
203	Byte	Life Min Temp		Minimum HDA temperature in degrees Celsius seen for the life of the device. This is a 2's complement integer. 80h indicates that this value is invalid.
204	Byte	Life Max Temp		Maximum HDA temperature in degrees Celsius seen for the life of the drive. This is a 2's complement number. 80h indicates that this value is invalid.
205	Byte	Reserved	00h	

Byte	Type	Field Name	Value	Description
209:206	Dword	Over Limit Count		Number of temperature recording Intervals since the last power-on reset where the recorded temperature was greater than Max Op Limit. See Table 64 for information about this Interval.
213:210	Dword	Under Limit Count		Number of temperature recording Intervals since the last power-on reset where the recorded temperature was less than Min Op Limit. See Table 64 for information about this Interval.
215:214	Word	SMART Status		Copy of the LBA field (32:8) for a SMART return status normal or error output, if any. (See Table 53)
217:216	Word	Min Recovery Time Limit		Minimum supported value for the RECOVERY TIME LIMIT field (See Table 56). A value of zero indicates that there is no minimum supported value reported.
479:218	Byte[262]	Reserved	00h	
511:480	Byte[32]	Vendor Specific	00h	

Table 53 SMART STATUS field

Value	Description
0000h	SMART status not reported.
2CF4h	The device has detected a threshold exceeded condition.
C24Fh	The device has not detected a threshold exceeded condition.
All others	Reserved

10.17.3 SCT Command Set

10.17.3.1 SCT Write Same (action code : 0002h)

Inputs: (Key Sector)

Table 54 SCT Write Same (Inputs)

Word	Name	Value	Description
0	Action Code	0002h	This action writes a pattern or sector of data repeatedly to the media. This capability could also be referred to as “Write All” or “Write Same”.
1	Function Code	0001h	Repeat Write Pattern (Background Operation)
		0002h	Repeat Write Sector (Background Operation)
		0101h	Repeat Write Pattern (Blocking Operation)
		0102h	Repeat Write Sector (Blocking Operation)
5:2	Start LBA	Qword	First LBA
9:6	Count	Qword	Number of sectors to fill
11:10	Pattern	Dword	If the Function Code is 0001h, this field contains a 32-bit pattern that is written on the media starting at the location specified in words two through five
255:12	Reserved	0000h	

Outputs: (TF Data)

Table 55 SCT Write Same (Outputs)

Command Block Input Registers (Success)	
Error	00h
Sector Count	Reserved
Sector Number	Reserved
Cylinder Low	Number of sectors to transfer (LSB) = 01h
Cylinder High	Number of sectors to transfer (MSB) = 00h
Device/Head	Reserved
Status	50h

The SCT Write Same command will begin writing sectors from Start LBA in incrementing order until Count sectors have been written. The HPA feature determines the last user LBA. This command will not write over a hidden partition when hidden partitions are enabled using the Host Protected Area drive capabilities. Automatic sector reassignment is permitted during the operation of this function.

If Start LBA or Start LBA + Count go beyond the last user LBA then an error is reported and the SCT command is not executed. Issuing this command with a value of zero for Start LBA and Count will cause all LBAs of the drive to be written the specified pattern.

Once the key sector has been issued, if the Function Code was 0002h or 0102h and the TF Data indicates that the drive is ready to receive data, log page E1h should be written to transfer the data.

Implementation notes for Background Operation (Function code = 0001h, 0002h)

In this mode, the drive will return command completion status when the drive finished receiving data.

Any command, including IDENTIFY DEVICE, other than SCT Status, issued to the drive while this command is in progress will terminate the SCT Write Same command. The incoming command is executed.

Use the SCT Status command to retrieve status information about the current SCT command. Example status information includes command active or complete, current LBA, and errors. When this command is in progress, the SCT status error code will be FFFFh, and set to 0000h if the command completes without error. It will be less than FFFFh and grater the 0000h if the command terminated prematurely for any reason.

Possible Extended Status Code for Background Operation (Function code = 0001h, 0002h)	
0008h	Background SCT command was aborted because of an interrupting host command
0009h	Background SCT command was terminated because of unrecoverable error
FFFFh	SCT command executing in background

Implementation notes for Blocking Operation (Function code = 0101h, 0102h)

In this mode, the drive will return command completion status when the drive finished the SCT Write Same operation.

Outputs for Error

Command Block Input Registers (Error)								
Register	7	6	5	4	3	2	1	0
Error	04h							
Sector Count	Extended Status code (LSB)							
Sector Number	Extended Status code (MSB)							
Cylinder Low	N/A							
Cylinder High	N/A							
Device/Head	-	-	-	-	-	-	-	-
Status	51h							

Possible Extended Status Code for Blocking Operation (Function code = 0101h, 0102h)	
0017h	Blocking SCT Write Same command was terminated because of unrecoverable error

Write pointer that is used for checking sequential write will be updated by this command.

10.17.3.2 Error Recovery Control command (action code : 0003h)

Inputs: (Key Sector)

Table 56 Error Recovery Control command (Inputs)

Word	Name	Value	Description
0	Action Code	0003h	Set the read and write error recovery time
1	Function Code	0001h	Set New Value
		0002h	Return Current Value
2	Selection Code	0001h	Read Timer
		0002h	Write Timer
3	Min Recovery Time Limit	Word	If the function code is 0001h, then this field contains the recovery time limit in 100ms units. The minimum SCT timeout value is 65 (=6.5 second). When the specified time limit is shorter than 6.5 second, the issued command is aborted.
255:4	Reserved	0000h	

Outputs: (TF Data)

Table 57 Error Recovery Control command (Outputs)

Command Block Input Registers (Success)	
Error	00h
Sector Count	If Function Code was 0002h, then this is the LSB of the requested recovery limit. Otherwise, this field is reserved.
Sector Number	If Function Code was 0002h, then this is the MSB of the requested recovery limit. Otherwise, this field is reserved.
Cylinder Low	Reserved
Cylinder High	Reserved
Device/Head	Reserved
Status	50h

The Error Recovery Control command can be used to set time limits for read and write error recovery. For non-queued commands, these timers apply to command completion at the host interface. For queued commands where in order data delivery is enabled, these timers begin counting when the command is sent to the device. These timers do not apply to streaming commands, or to queued commands when out-of-order data delivery is enabled.

These command timers are volatile. The default value is 0 (i.e., disable command timeout).

10.17.3.3 Feature Control Command (action code : 0004h)

Inputs: (Key Sector)

Table 58 Feature Control command (Inputs)

Word	Name	Value	Description
0	Action Code	0004h	Set or return the state of drive features described in Table 60
1	Function Code	0001h	Set state for a feature
		0002h	Return the current state of a feature
		0003h	Return feature option flags
2	Feature Code	Word	See Table 60 for a list of the feature codes
3	State	Word	Feature code dependent value
4	Option Flags	Word	Bit15:1 = Reserved If the function code is 0001h, setting bit 0 to one causes the requested feature state change to be preserved across power cycles. If the function code is 0001h, setting bit 0 to zero causes the requested feature state change to be volatile. A hard reset causes the drive to revert to default, or last non-volatile setting.
255:5	Reserved	0000h	

Outputs: (TF Data)

Table 59 Feature Control command (Outputs)

Command Block Input Registers (Success)	
Error	00h
Sector Count	If Function Code was 0002h, then this is the LSB of Feature State. If Function Code was 0003h, then this is the LSB of Option Flags. Otherwise, this field is reserved.
Sector Number	If Function Code was 0002h, then this is the MSB of Feature State. If Function Code was 0003h, then this is the MSB of Option Flags. Otherwise, this field is reserved.
Cylinder Low	Reserved
Cylinder High	Reserved
Device/Head	Reserved
Status	50h

Table 60 Feature Code List

Feature Code	State Definition
0001h	0001h: Allow write cache operation to be determined by Set Feature command 0002h: Force write cache enabled 0003h: Force write cache disabled If State 0001h is selected, the ATA Set Feature command will determine the operation state of write cache. If State 0002h or 0003h is selected, write cache will be forced into the corresponding operation state, regardless of the current ATA Set Feature state. Any attempt to change the write cache setting through Set Feature shall be accepted, but otherwise ignored, and not affect the operation state of write cache and complete normally without reporting an error. In all cases, bit 5 of Word 85 in the Identify Device information will reflect the true operation state of write cache, one indicating enabled and zero indicating disabled. The default state is 0001h.
0002h	0001h: Enable Write Cache Reordering 0002h: Disable Write Cache Reordering The default state is 0001h. The drive does not return error for setting state 0002h, but the state is ignored.
0003h	Set time interval for temperature logging. 0000h is invalid. 0001h to FFFFh logging interval in minutes. This value applies to the Absolute HDA Temperature History queue. Issuing this command will cause the queue to be reset and any prior values in the queue will be lost. Queue Index shall be set to zero and the first queue location will be set to the current value. All remaining queue locations are set to 80h. The Sample Period, Max Op Limit, Over Limit, Min Op Limit and Under Limit values are preserved. Default value is 0001h.
0004h-CFFFh	Reserved
D000h-FFFFh	Vendor Specific

10.17.3.4 SCT Data Table Command (action code : 0005h)

Inputs: (Key Sector)

Table 61 SCT Data Table command (Inputs)

Word	Name	Value	Description
0	Action Code	0005h	Read a data table
1	Function Code	0001h	Read Table
2	Table ID	Word	See Table 64 for a list of data tables
255:2	Reserved	0000h	

Outputs: (TF Data)

Table 62 SCT Data Table command (Outputs)

Command Block Input Registers (Success)	
Error	00h
Sector Count	Reserved
Sector Number	Reserved
Cylinder Low	Number of sectors to transfer (LSB) = 01h
Cylinder High	Number of sectors to transfer (MSB) = 00h
Device/Head	Reserved
Status	50h

Table 63 Table ID

Table ID	Description
0000h	Invalid
0001h	Reserved
0002h	HDA Temperature History Table (in absolute degree C). See *Note 1 – The Absolute HDA Temperature History is preserved across power cycles with the requirement that when the drive powers up, a new entry is made in the history queue of 80h, an invalid absolute temperature value. This way an application viewing the history can see the discontinuity in temperature result from the drive being turned off.* *Note 2 – When the Absolute HDA Temperature history is cleared, for new drives or after changing the Logging Interval, the Queue Index shall be set to zero and the first queue location shall be set to the current Absolute HDA Temperature value. All remaining queue locations are set to 80h.*
0003h-CFFFh	Reserved
D000h-FFFFh	Vendor Specific

Table 64 Data Format of HDA Absolute Temperature History Table

Byte	Size	Field Name	Description
1:0	Word	Format Version	Data table format version (=0002h)
3:2	Word	Sampling Period	Absolute HDA Temperature sampling period in minutes. 0000h indicates sampling is disabled.
5:4	Word	Interval	Timer interval between entries in the history queue.
6	Byte	Max Op Limit	Maximum recommended continuous operating temperature. This is a one byte 2's complement number that allows a range from -127°C to +127°C to be specified. 80h is an invalid value. This is a fixed value.
7	Byte	Over Limit	Maximum temperature limit. This is a one byte 2's complement number that allows a range from -127°C to +127°C to be specified. 80h is an invalid value. This is a fixed value.
8	Byte	Min Op Limit	Minimum recommended continuous operating limit. This is a one byte 2's complement number that allows a range from -127°C to +127°C to be specified. 80h is an invalid value. This is a fixed value.
9	Byte	Under Limit	Minimum temperature limit. This is a one byte 2's complement number that allows a range from -127°C to +127°C to be specified. 80h is an invalid value. This is a fixed value.
29:10	Byte[20]	Reserved	
31:30	Word	Queue Size	Number of entry locations in history queue. This value is 128.
33:32	Word	Queue Index	Last updated entry in queue. Queue Index is zero-based, so Queue Index 0000h is the first location in the buffer (at offset 34). The most recent temperature entered in the buffer is at Queue Index + 34. See Note 1 and Note 2.
(Queue Size+33):34	Byte[Queue Size]	Queue Buffer	This is a circular buffer of absolute HDA Temperature values. These are one byte 2's complement numbers, which allow a range from -127°C to +127°C to be specified. A value of 80h indicates an initial value or a discontinuity in temperature recording. The Actual time between samples may vary because commands may not be interrupted. The sampling period is the minimum time between samples. See Note 1. If the host changes the logging interval using the volatile option, the interval between entries in the queue may change between power cycles with no indication to the host.
511:(Queue Size +34)	Byte [512-Queue Size-34]	Reserved	

Note 1 – The Absolute HDA Temperature History is preserved across power cycles with the requirement that when the drive powers up, a new entry is made in the history queue of 80h, an invalid absolute temperature value. This way an application viewing the history can see the discontinuity in temperature result from the drive being turned off.

Note 2 – When the Absolute HDA Temperature history is cleared, for new drives or after changing the Logging Interval, the Queue Index shall be set to zero and the first queue location shall be set to the current Absolute HDA Temperature value. All remaining queue locations are set to 80h.

10.18 Extended Power Conditions (EPC) Feature Set

The Extended Power Conditions feature set provides a host with additional methods to control the power condition of a device. The host can check power condition using Check Power Mode command.

Subcommand code 4Ah enables, disables, and configures the use of the Extended Power Conditions feature set. If the EPC feature set is not supported, then the device return command aborted Table 65 describes the EPC subcommands and Table 66 describes the power condition IDs.

Table 65 Extended Power Conditions Subcommands

EPC Subcommand	Description
0h	Restore Power Condition Settings
1h	Go To Power Condition
2h	Set Power Condition Timer
3h	Set Power Condition State
4h	Enable the EPC feature
5h	Disable the EPC feature
6h … Fh	Reserved

Table 66 Power Condition IDs

Power Condition ID	Power Condition Name	Description
00h	standby_z	Standby
01h	standby_y	Low RPM Idle
02h…80h		Reserved
81h	idle_a	Active Idle
82h	idle_b	Low Power Idle
83h	idle_c	Low RPM Idle
84h … FEh		Reserved
FFh	All	All supported EPC power conditions

10.18.1 Power Conditions

idle_a, idle_b and idle_c are power conditions within the PM1:Idle power management state. standby_y and standby_z are power conditions within the PM2:Standby power management state. Please refer to ACS-2 “3.1 Definitions and abbreviations” about PM1:Idle and PM2:Standby. The power conditions are ordered from highest power consumption (i.e., shortest recovery time) to lowest power consumption (i.e., longest recovery time) as follows:

idle_a power >= idle_b power >= idle_c power >= standby_y power >= standby_z power

Each of these power conditions has a set of current, saved and default settings. Default settings are not modifiable. Default and saved settings persist across power cycles. The current settings do not persist across power cycles.

10.18.2 Power Condition Timers

The device has manufacturer specified power-on default settings for the power condition timers. Power condition timers are changeable with the SET FEATURES Extended Power Conditions subcommand.

A power condition timer set to zero indicates that the associated power condition is disabled.

If the power condition is enabled, then the value of each timer specifies the time after command completion that the device waits before transitioning to the power condition. All enabled power condition timers run concurrently.

On command completion all timers that were stopped are initialized with the Current Timer settings values and started.

As a result of processing any command, the device may change to a different power condition.

If an enabled timer associated with a power condition lower than the power condition that the device is currently in expires, then the device transitions to the power condition associated with that timer (e.g., if the standby_z timer is set to a smaller interval than the idle_b timer, and the device is currently in the standby_z power condition, then the device remains in the Standby_z power condition when the idle_b timer expires). If the timer expiration qualifies the device to transition to more than one enabled power condition, then the device transitions to the power condition with the least power consumption.

If a command is accepted that requires a transition to Active, then the timers are stopped. If a command is accepted that does not require a transition to Active (e.g., a Check Power Mode command), then the timers continue to run.

Prior to entering into any power condition that prevents accessing the media (e.g., before a hard drive stops its spindle motor during transition to the standby_z power condition) and if volatile write cache is enabled, then the device shall write all cached data to the medium for the device (e.g., as a device does in response to a flush command).

10.18.3 Interaction with Resets, Commands and Other Features

On successful processing of a power cycle, the EPC enables sub command, the device:
When EPC is Enabling, the following content is executed.

1) stop all EPC timers.
2) copy the Saved Timer Enabled field to the Current Timer Enabled field, for all supported power conditions.
3) copy the Saved Timer Settings field to the Current Timer Settings field, for all supported power conditions.
4) initialize and restart all enabled EPC timers with Current values.

On successful processing of a hardware reset, a software reset, or a DEVICE RESET command, the device:
When EPC is Enabling, the following content is executed.

1) stop all EPC timers.
2) remain in the current power condition.
3) initialize and restart all enabled EPC timers with Current values.

The Extended Power Conditions feature set and the Advanced Power Management feature set are mutually exclusive. All EPC subcommands, except Enable the EPC feature set, returns command aborted if the EPC feature set is disabled. If the device processes a SET FEATURES Enable APM subcommand without error and IDENTIFY DEVICE data Word 120 bit 7 is set to one, then the device shall disable the EPC feature set.

During background activities, all power condition timer may be stopped. On completion of the activity, any stopped EPC timers are restarted from where they were stopped.

10.19 Sanitize Device Feature Set

10.19.1 Overview

The Sanitize Device feature set allows hosts to request that devices modify the content of all user data areas in the device using sanitize operations. Sanitize operations use one of the operations defined in this sub clause to make all previously written content in the user data area of the device unable to be read. Sanitize operations affect the following:

a) user data areas
b) user data areas that are not currently allocated (e.g., previously allocated areas and physical sectors that have become inaccessible)
c) user data caches

Sanitize operations render user data previously stored in caches, using any methods, unable to be read.
The Sanitize Device feature set is implemented, the following commands are supported:

a) SANITIZE STATUS EXT
b) SANITIZE FREEZE LOCK EXT
c) CRYPTO SCRAMBLE EXT (data encryption model only)
d) OVERWRITE EXT

If physical sectors that have become inaccessible are not successfully sanitized, then Sanitize operations don't cause a transition to the SD3: Sanitize Operation Failed state.
Sanitize operations don't affect non-user data areas (e.g., logs, and Device SMART data structure).
Sector reallocation is able to be performed during the operation of this function. After completion of a sanitize operation, if:

a) all physical sectors that are available to be allocated for user data have been successfully sanitized
b) any physical areas that were not successfully sanitized were removed from use,

then:

a) the Sanitize Device state machine transitions to SD4: Sanitize Operation Succeeded; and
b) in subsequent SANITIZE STATUS EXT commands, set the SANITIZE OPERATION COMPLETED WITHOUT ERROR bit to one in the Normal Outputs

Conversely, if physical sectors that are available to be allocated for user data (e.g., allocated physical sectors) were not successfully sanitized, then:

a) the Sanitize Device state machine transitions to SD3: Sanitize Operation Failed; and
b) in subsequent SANITIZE STATUS EXT commands, return an error, and set the LBA field of the Error Outputs to report the value of Sanitize Command Unsuccessful

To initiate a sanitize operation the host issues one of the following sanitize operation commands:

a) A CRYPTO SCRAMBLE EXT command (data encryption model only)
b) An OVERWRITE EXT command

The sanitize operation continues after command completion of the initiating sanitize operation command. The SANITIZE STATUS EXT command to reports progress and completion.

After a device has started processing a sanitize operation, and until the device transitions to the SD0:

Sanitize Idle state, the device aborts all commands other than:

a) IDENTIFY DEVICE command
b) IDLE IMMEDIATE command with UNLOAD feature
c) Request Sense Data Ext command;
d) SANITIZE STATUS EXT command;
e) SMART READ LOG command requesting one of the following log addresses:
   A) E0h;
   B) 30H;

f) READ LOG EXT command requesting one of the following log addresses:
   A) E0h;
   B) 30h; or
   C) 10h;
g) READ LOG DMA EXT command requesting one of the following log addresses:
   A) E0h;
   B) 30h; or
   C) 10h;
h) SMART RETURN STATUS command; or
i) SET FEATURES PUIS feature set device spin-up subcommand;
j) SANITIZE ANTIFREEZE LOCK EXT command;
k) SECURITY UNLOCK command;
l) supported sanitize operations commands, if the device is in the SD3: Sanitize Operation Failed state (see Section 10.19.3.4) or the SD4: Sanitize Operation Succeeded state (see Section 10.19.3.5).

If the device processes an IDLE IMMEDIATE command with UNLOAD that returns command completion without error, then the sanitize operation shall be suspended. The sanitize operation shall be resumed after the processing of a software reset, a hardware reset, or any new command except IDLE IMMEDIATE command with UNLOAD.

If the device processes a power-on reset and enters the PM5: PUIS and spin-up subcommand not supported state (see Figure 13), then the device shall resume processing the sanitize operation after receiving a media access command, even though the media access command returns command aborted.

The SANITIZE STATUS EXT command returns information about the current sanitize operation, if any, including a percentage of completion if a sanitize operation is in progress.

A CRYPTO SCRAMBLE EXT command (data encryption model only) or OVERWRITE EXT command that returns command completion with no error transitions the device into the SD2: Sanitize Operation state. The device remains in this state until the device has completed the sanitize operation (see Figure 13).

The SANITIZE FREEZE LOCK EXT command causes the device to transition to the SD1: Sanitize Frozen state and causes any subsequent CRYPTO SCRAMBLE EXT command (data encryption model only) or OVERWRITE EXT command to be aborted. If the device processes a power-on reset or a hardware reset, then the device transitions from the Sanitize Frozen state to the Sanitize Idle state.

The crypto scramble operation makes previously written contents in the user data area irretrievable. (data encryption model only)

The overwrite operation fills all user data with a four byte pattern passed within the LBA field of the command. Parameters for the OVERWRITE EXT command include a count for multiple overwrites and the option to invert the four byte pattern between consecutive overwrite passes.

A software reset does not cause the SD2: Sanitize Operation state to transition to another state.

10.19.2 Sanitize Device Feature

Sanitize Device Feature Set is a powerful data erase feature. Two data erase features are supported. One is an Overwrite Ext command, and the other is Crypto Scramble Ext command. Crypto Scramble Ext command can be supported with a data encryption model only.
Individual Sanitize Device commands are identified by the value specified in the FEATURE field.
The following commands are supported for this feature.

Command	COMMAND field value	FEATURE field value
SANITIZE STATUS EXT	(‘B4’h)	(‘0000’h)
CRYPTO SCRAMBLE EXT (data encryption model only)	(‘B4’h)	(‘0011’h)
OVERWRITE EXT	(‘B4’h)	(‘0014’h)
SANITIZE FREEZE LOCK EXT	(‘B4’h)	(‘0020’h)

10.19.3 Sanitize Device State Machine

Figure 13 describes the operation of the Sanitize Device state machine.

10.19.3.1 SD0: Sanitize Idle State

In SD0: Sanitize Idle state the Sanitize Device state machine is ready for a sanitize operation command or a SANITIZE FREEZE LOCK EXT command.

This state is entered when the device processes a power-on reset while in the SD1: Sanitize Freeze Lock state or the SD4: Sanitize Operation Succeeded state.

While in this state, Sanitize Device state machine does not change state if the device processes:

a) a hardware reset or power-on reset

b) a SANITIZE STATUS EXT command

Transition SD0:SD1: If the device processes a SANITIZE FREEZE LOCK EXT command, then the device transitions to the SD1: Sanitize Frozen state.

Transition SD0:SD2: If the device successfully processes a supported sanitize operation command, then the device transitions to the SD2: Sanitize Operation state.

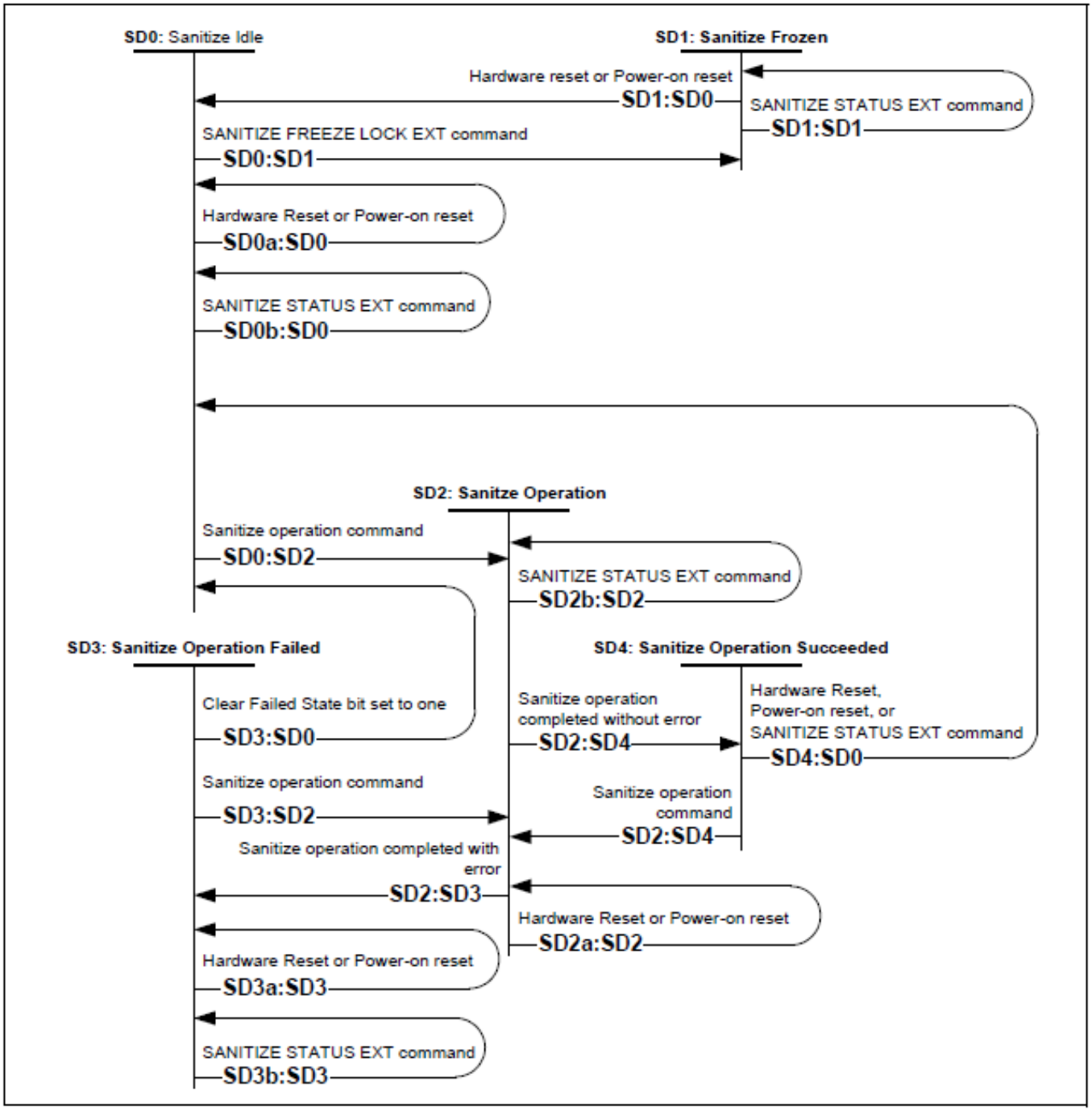

Figure 13 Sanitize Device state machines

10.19.3.2 SD1: Sanitize Frozen State

In SD1: Sanitize Frozen state, the device will abort Sanitize operation commands.

While in this state, Sanitize Device state machine does not change state if the device processes a SANITIZE STATUS EXT command.

Transition SD1:SD0: If the device processes a hardware reset or a power-on reset, then the device transitions to the SD0: Sanitize Idle state.

10.19.3.3 SD2: Sanitize Operation State

In the SD2: Sanitize Operation state, the device is processing a sanitize operation.

While in this state, Sanitize Device state machine does not change state if the device processes:

a) a hardware reset or power-on reset; and

b) a SANITIZE STATUS EXT command.

Transition SD2:SD3: If a sanitize operation completes with an error, then the device transitions to the SD3: Sanitize Operation Failed state.

Transition SD2:SD4: If a sanitize operation completes without an error, then the device transitions to the SD4: Sanitize Operation Succeeded state.

10.19.3.4 SD3: Sanitize Operation Failed State

In the SD3: Sanitize Operation Failed state, the device has completed processing a sanitize operation without success.

While in this state, Sanitize Device state machine does not change state if the device processes:

a) a hardware reset or power-on reset; and

b) a SANITIZE STATUS EXT command with the CLEAR SANITIZE OPERATION FAILED bit cleared to zero.

Transition SD3:SD0: If

a) the Sanitize operation was initiated by a Sanitize operation command with the FAILURE MODE bit set to one; and

b) the SANITIZE STATUS EXT command has been successfully processed with the CLEAR SANITIZE OPERATION FAILED bit set to one,

then the device transitions to the SD0: Sanitize Idle state.

Transition SD3:SD2: If the device processes a supported sanitize operation command that reports command completion with no error, then the device transitions to the SD2: Sanitize Operation state.

10.19.3.5 SD4: Sanitize Operation Succeeded State

In the SD4: Sanitize Operation Succeeded state, the device has completed processing a successful sanitize operation.

Transition SD4:SD0: If the device processes

a) a hardware reset;

b) a power-on reset; or

c) a SANITIZE STATUS EXT command

then the device transitions to the SD0: Sanitize Idle state.

Transition SD4:SD2: If the device successfully processes a supported Sanitize operation command, then the device transitions to the SD2: Sanitize Operation state.

10.20 Trusted Computing Group Feature Set

This chapter provides information on Western Digital encryption-specific HDD firmware and features. It is assumed that the reader is familiar with the referenced specifications and industry standards.

10.20.1 Referenced Specifications and Standards

10.20.1.1 TCG Specifications

This section references 3 separate TCG specifications, which are available on the TCG website: (**http://www.trustedcomputinggroup.org/**):

1. TCG Core Specification, Version 2.01, Revision 1.00 (08/15/2015)
   - The TCG Core Specification is the general specification for trusted computing that encompasses all classes of devices, including storage
2. TCG Storage Interface Interactions Specification (SIIF), Version 1.07, (1/30/2013)
   - Specifies the interaction between the HDD and the SCSI/ATA protocols
3. TCG Storage Security Subsystem Class (SSC): Enterprise, Version 1.01, rev 1.00 (8/5/2015)
   - A Security Subsystem Class defines minimum acceptable Core Specification capabilities of a storage device in a specific class (in our case – enterprise).
   - Storage devices in specific classes may have a subset of the capabilities that are defined in the core specification
4. TCG Storage Security Subsystem Class: Opal Specification, Version 2.01 Revision 1.00 (8/5/2015)

10.20.1.2 Federal Information Processing Standards (FIPS)

This section references the following Federal Information Processing Standards, published by the US National Institute of Standards (NIST), which are available on the NIST website (**http://www.itl.nist.gov/fipspubs/**):

1. FIPS 197, Advanced Encryption Standard (AES), 2001 November 26.
   http://csrc.nist.gov/publications/fips/fips197/fips-197.pdf
2. FIPS 180-4, Secure Hash Standard (SHS), August 2015
   http://csrc.nist.gov/publications/fips/fips180-4/fips180-4_final.pdf

10.20.1.3 National Institute of Standards (NIST)

This section references the following NIST publications, available on the NIST website (**http://www.nist.gov/index.html**)

- [AES] Advanced Encryption Standard, FIPS PUB 197, NIST, 2001, November
- [DSS] Digital Signature Standard, FIPS PUB 186-4, NIST, 2013, July
- [HMAC] The Keyed-Hash Message Authentication Code, FIPS PUB 198-1, 2008 July
- [SHA] Secure Hash Standard (SHS), FIPS PUB 180-4, NIST, 2015 August
- [SP800-38E] Recommendation for Block Cipher Modes of Operation: The XTS-AES Mode for Confidentiality on Storage Devices, SP800-38E, NIST, 2010 January
- [SP800-38F] Recommendation for Block Cipher Modes of Operation: Methods for Key Wrapping, NIST, 2012 December
- [SP800-57] Recommendation for Key Management – Part I General (Revision 4), NIST, 2016 January
- [SP800-90A] Recommendation for Random Number Generation Using Deterministic Random Bit Generators, NIST, 2015 June
- [SP800-90B] Recommendation for the Entropy Sources Used for Random Bit Generation, NIST, 2018 January
- [SP800-131A] Transitions: Recommendation for Transitioning the Use of Cryptographic Algorithms and Key Lengths (Revision 2), NIST, 2019 March
- [SP800-132] Recommendation for Password-Based Key Derivation, NIST, 2010 December
- [SP800-133] Recommendation for Cryptographic Key Generation (Revision 2), NIST, June 2020

10.20.1.4 Department of Defense

DoD 5220.22-M, "National Industrial Security Program Operating Manual", 2/28/2006
https://www.esd.whs.mil/Portals/54/Documents/DD/issuances/dodm/522022M.pdf?ver=2017-04-17-134632-467

10.20.1.5 RSA Laboratories Standards

1. PKCS #1 (v1.5) and RSA algorithm with 3072 bit key size.
2. PKCS #5 v2.0 Password-Based Cryptography Standard

10.20.2 Implementation Exceptions

The following is a list that describes non-compliance with the TCG Enterprise SSC specification:

- The SSC specification requires support for 1023 bands, but the implementation supports up to 15 bands.
- The K_AES_256 table was implemented with only the **UID** and **MODE** columns.
- Only one active session is permitted at a time. If a new session is requested when a session is already active, the drive answers the host with SP_BUSY, instead of NO_SESSIONS_AVAILABLE

10.20.3 Implementation Features and Details Outside of TCG Specifications

The following features are outside of the TCG specifications.

1. Ports
2. Firmware signing

The following implementation details are outside of the TCG Enterprise SSC specification.

a. The SSC Specification states “The TPer SHALL implement the ParamCheck Longitudinal Redundancy Check (LRC) for Get and Set method calls on a PIN value". If the LRC check is erroneously applied to a value other than a PIN we ignore it, therefore no error is generated.

b. When handling a "TCG command followed by a Read/Write command", all reads and writes that follow a TCG command will be processed in the normal way. No special handling or error messages will be sent to the host. It is up to the host to understand the possible outcomes of TCG commands and read/write command ordering and plan accordingly.

c. The TPer replies with SP_BUSY for requests beyond 1 session.

d. TCG Life Cycle Model by Activate Method, Revert Method, and RevertSP Method is implemented per Opal SSC

10.20.4 Encryption Algorithms

10.20.4.1 Advanced Encryption Standard (AES) Support

AES encryption is implemented in hardware, with support for ECB or XTS mode for 128 bit or 256 bit keys.

A single key is active at any one time within the AES hardware engine. Firmware is responsible for reading the keys from the hardware and also for determining which key is attached to a given LBA range; the hardware can only detect if the LBA has been encrypted or not. The TCG protocol does not allow for a user to choose or switch between AES algorithms, so it is up to the vendor to choose which AES algorithm is used in their implementation. The Western Digital TCG Enterprise SSC implementation in firmware supports AES 256-XTS only.

The AES hardware implementation used for the range encryption has received the FIPS 197 certification by the US National Institute of Standards (NIST), which are available on the NIST

10.20.4.2 'Level 0 Discovery' Vendor Specific Data

This section refers to section 3.6.2 of the TCG Storage Security Subsystem Class document (see the Specifications section of this document). This Vendor Specific section is documented below.

Table 67 Vendor Specific Data for Level 0 Discovery

Byte	Bit							
	7	6	5	4	3	2	1	0
16	Version (set to 0)							
17	Vendor Specific State Information							
18	Reserved							
19	RSVD	MB_s	0	0	Diag_s	Dload_s	Locking_s	FDE_s
20	Reserved							
21	RSVD	MB_e	0	0	Diag_e	Dload_e	Locking_e	FDE_e
22	0	0	0	0	0	0	0	0
23-47	Reserved							

FDE_s/FDE_e - Full disk encryption is Supported (equivalent to Media Encryption in Locking Feature Descriptor Enterprise SSC 3.6.2.5) / Full disk encryption is Enabled on one or more band.

Locking_s/Locking_e - LBA band locking is supported - locking object exists in the locking SP of the device (equivalent to Locking Enabled in Locking Feature Descriptor Enterprise SSC 3.6.2.5) / The locking object for a band has either ReadLocked or WriteLocked attribute set (equivalent to Locked in Locking Feature Descriptor Enterprise SSC 3.6.2.5).

Dload_s/Dload_e - support for Admin SP Firmware download port / Firmware download port via Admin SP is locked.

Diag_s/Diag_e - Support for Admin SP vendor specific Diagnostic port / Diagnostics port via Admin SP is locked.

MB_s/MB_e - Multiple encrypting bands supported / multiple encrypting bands enabled. This bit shall be set to 1 if more than one band exists in addition to the global band and is defined with at least one LBA.

10.20.4.3 Deterministic Random Bit Generation (DRBG)

Pseudo-random number generation is implemented with a certified NIST SP800-90A DRBG. The DRBG uses AES as a primitive for both entropy mixing and entropy output. DRBG state is kept private to ensure that the keys that are generated by the device are unpredictable. The entropy source of the DRBG is servo subsystem noise. It has been verified to NIST SP800-90B.

10.20.4.4 Key Erasure

Cryptographic erase procedure

- Erase and overwrite wrapped key material with 0x00.
- Erase and store the new wrapped key material.

10.20.5 TCG Enterprise SSC Tables

Two copies of all TCG Enterprise SSC tables and data structures are stored in the reserved area of the disk; one is used as a primary copy and the other as a backup copy. The backup copy is used in the event the primary copy becomes corrupted. Each time a write is executed to any TCG table, both the primary and backup copies of the tables are updated and saved in the reserved area. In the case of a corrupted copy, the good copy is always used to restore the corrupted copy to the correct state. If both copies of the tables become corrupted during operation, the tables will be reinitialized to default values automatically, and this will result in a key mismatch error when a read is attempted.

The default values in the TCG tables created at the time of manufacturing are per the TCG Enterprise SSC specification. The following tables contain VU (Vendor Unique) entries, which are set at the time of manufacturing.

- 'Admin SP' C_PIN table
- 'Locking SP' C_PIN table
- K_AES_256 table
- 'Locking SP' Locking Access Control table
- 'Locking Info' Table
- 'Locking SP' Locking Table

The VU entries for these tables are specified below. In addition, explanation of default values is given for non-VU entries that require it.

10.20.5.1 'Admin SP' C_PIN and 'Locking SP' C_PIN Tables

Per TCG Enterprise SSC specification, the PIN is set to the MSID at manufacturing time. Try Limit is set to 0, meaning that there is no limit. Tries is set 0, meaning that there have been no fail attempts. Persistence is set to 0, meaning the "Tries" value does not persist through power cycles (The "Tries" value is reset to 0 after successful attempt or a power cycle).

Table 68 Western Digital Default Values for 'Admin SP' C_PIN & 'Locking SP' C_PIN

PIN	Try Limit	Tries	Persistence
SID	0	0	0
MSID	0	0	0

10.20.5.2 K_AES_256 Table

The K_AES_256 table has 16 rows, one row for each band that can be allocated by the user. The first row is for the "global range", also known as Band 0. This table was implemented without the "Name", "Common Name", and "Key" Columns.

Table 69 Western Digital Implementation of K_AES_256 Table

UID (8 byte hex)	MODE
00 00 08 06 00 00 00 01	23
00 00 08 06 00 00 00 02	23
..	..
00 00 08 06 00 00 00 10	23

The mode is specified in the TCG Enterprise SSC as a "Vendor Unique" (VU) entry. Western Digital initializes it in manufacturing to **mode**=23 (media encryption mode, per TCG specification) for all 64 entries.

10.20.5.3 'Locking SP' Access Control Table

The TCG Enterprise SSC defines the values for Row Number and UID as "Vendor Unique" (VU). Western Digital has defined them to be the row number in the table, with a range of 0-459 The range is calculated using the following formula:

number_of_rows = (#Supported Bands * 7) +12, where

- #Supported Bands = 16 (The implementation supports 15 bands and Band 0)
- The number 7 comes from the fact that each band has 7 UID/method combinations
- The number 12 comes from the following 12 methods that must be included in the table.
  1. ThisSP / Authenticate
  2. Authority Table/Next
  3. Anybody Authority Object/ Get
  4. Band Masters Authority Object/ Get
  5. Erase Master Auth. Object / Get
  6. C_PIN table / Next
  7. Erase Master C_PIN Object/ Set
  8. Locking Info Table / Get
  9. Locking Table / Next
  10. DataStore / Get
  11. DataStore / Set
  12. ThisSP / Random

Table 70 Western Digital Implementation of 'Locking SP' Access Control Table

Row Number	UID
0	0
1	1
…	…
124	124

10.20.5.4 'Locking Info' Table

As specified in the TCG Enterprise SSC, this table has only 1 row. The "Vendor Unique" entries are specified in the table below. Encryption Support is initialized to **Encryption Support=23** (media encryption mode) in manufacturing.

Table 71 Western Digital Implementation of 'Locking Info' Table

NAME	Version	Encrypt Support	Max Ranges	Max ReEncryptions	Keys Available Cfg
0	0	23	6	0	0

10.20.5.5 'Locking SP' Locking Table

The "Vendor Unique" (VU) values for this table are shown below.

Table 72 Western Digital Implementation of 'Locking SP' Locking Table

Next Key	ReEncrypt State	ReEncrypt Request	Adv Key Mode	Verf Mode	Cont On Reset	Last ReEncrypt LBA	Last Re Enc Stat	General Status
00 00 00 00 00 00 00 00h	0	0	0	0	0	0	0	0
-	-	-	-	-	-	-	-	-
00 00 00 00 00 00 00 05h	0	0	0	0	0	0	0	0

In the **ActiveKey** column, the Enterprise SSC allows for byte 3 to be defined as either 05 or 06. The Western Digital implementation uses 06.

10.20.6 Firmware Download and Signing

The Western Digital Firmware signing and download for encryption drives is meant to provide a mechanism for secure updates through the Host interface. Firmware is downloaded to the drive through the host interface, and the signature is verified using a public key installed in the reserved area during manufacturing, before it is loaded to RAM or installed in the reserved area on the HDD.

Signature verification uses the RSA 3072 PSS (Probabilistic Signature Scheme) signature verification algorithm with EMSA-SHA256 as padding function.

All Western Digital firmware packages will be signed. If the signature cannot be successfully verified, the firmware cannot be downloaded onto the Western Digital drive. Failures to authenticate the firmware image will result in Check Condition with KCQ 5/26/02 (FRU 0). The act of issuing a firmware download to the drive will result in an implicit close of all open sessions at the security layer.

10.20.7 Ports

The ports capability is a Western Digital feature which is not a requirement under TCG Enterprise SSC. In order to use the ports capabilities on encryption drives, the user must successfully authenticate. Once a user successfully authenticates, they may change the state of any of the ports at any time during an active session to either the locked or unlocked state. The functionality and definition of these ports is shown below in a table.

The feature does make use of the TCG structures and tables. An additional table, the ports table, has been implemented, and additional entries were made to the Admin SP ACE table and the Admin SP Access Control Table.

The ports table and the modified TCG Enterprise SSC tables are shown below.

Table 73 Ports Functionality

Port Name	Description
Firmware Download	This port has 2 valid states: locked and unlocked. On encryption drives, the download port is unlocked initially, Lock On Reset is "Null". Code can be downloaded onto the drive after the signature is successfully verified. If the signature cannot be verified successfully, no firmware can be downloaded to the drive. The user can change the state of the firmware download port only after authentication. On non-encryption drives, this port will be set to unlocked at the factory, and the state cannot be changed by the user. Firmware will be downloaded to the non-encryption drive through this port.
Diagnostics	This port has 2 valid states: locked and unlocked. This port allows Western Digital access to modify any TCG table or key. In order to open this port both the SID and the Maker authorities need to be authenticated. The purpose of this port is to aid Western Digital in debugging.

Table 74 Ports Table

UID	Name	LockOnReset	PortLocked
00 01 00 02 00 01 00 02	Firmware_Dload_Port	Null	FALSE
00 01 00 02 00 01 00 01	Diagnostic_Port	PowerCycle	TRUE

Table 75 Modified ‘Admin SP’ ACE Table

UID	Name	Cmn Name	Boolean Expression	Row Start	Row End	Column Start	Column End
00 00 00 08 00 00 00 01	Anybody	“”	00 00 00 09 00 00 00 01	Null	Null	‘’’’	‘’’’
00 00 00 08 00 00 00 03	Makers	‘’’’	00 00 00 09 00 00 00 03	Null	Null	‘’’’	‘’’’
00 00 00 08 00 00 02 01	SID	“”	00 00 00 09 00 00 00 06	Null	Null	‘’’’	‘’’’
00 00 00 08 00 00 8C 03	SID_SetSelf	“”	00 00 00 09 00 00 00 06	Null	Null	“PIN”	“PIN”
00 00 00 08 00 00 8C 04	MSID_Get	“”	00 00 00 09 00 00 00 01	Null	Null	“PIN”	“PIN”
00 00 00 08 00 00 8C 05	SID_Set Makers	“”	00 00 00 09 00 00 00 06	Null	Null	“Enabled”	“Enabled”
00 00 00 08 00 00 8C 06	SID_Makers_SetDiag	“”	00 00 00 09 00 00 00 06 And 00 00 00 09 00 00 00 03	Null	Null	“PortLocked”	“PortLocked”
00 00 00 08 00 00 8C 07	SID_Makers_GetDiag	“”	00 00 00 09 00 00 00 06 And 00 00 00 09 00 00 00 03	Null	Null	“PortLocked”	“PortLocked”
00 00 00 08 00 00 8C 08	SID_SetPort [1]	“”	00 00 00 09 00 00 00 06	Null	Null	“PortLocked”	“PortLocked”
00 00 00 08 00 00 8C 09	SID_GetPort [1]	“”	00 00 00 09 00 00 00 06	Null	Null	“LockOnReset”	“PortLocked”
00 00 00 09 00 01 FF 01	ACE_Makers_Set_Enabled	“”	00 00 00 09 00 00 00 06	Null	Null	“”	“”

[1] These lines are the additional entries required to implement the firmware download port.

Table 76 Modified 'Admin SP' Access Control Table

Row Number	UID	Invoking ID	Method ID	Common Name	ACL	Log	Add ACE ACL	Remove ACE ACL	GetACL ACL
VU	VU	00 00 00 00 00 00 00 01 (This SP)	00 00 00 06 00 00 00 0C (Authenticate)	Anybody Authenticate Admin SP	00 00 00 08 00 00 00 01 (Anybody)	None	Null	Null	00 00 00 08 00 00 00 01 (Anybody)
VU	VU	00 00 00 09 00 00 00 00 (Authority table)	00 00 00 06 00 00 00 08 (Next)	Makers-Next-Authority table	00 00 00 08 00 00 00 03 (Makers)	None	Null	Null	00 00 00 08 00 00 00 03 (Makers)
VU	VU	00 00 00 09 00 00 00 01 (Anybody Authority object)	00 00 00 06 00 00 00 06 (Get)	Anybody-Get-Anybody Authority Object	00 00 00 08 00 00 00 01 (Anybody)	None	Null	Null	00 00 00 08 00 00 00 01 (Anybody)
VU	VU	00 00 00 09 00 00 00 03 (Makers Authority object)	00 00 00 06 00 00 00 06 (Get)	Anybody-Get-Anybody Authority Object	00 00 00 08 00 00 00 03 (Makers)	None	Null	Null	00 00 00 08 00 00 00 03 (Makers)
VU	VU	00 00 00 09 00 00 00 06 (SID Authority object)	00 00 00 06 00 00 00 06 (Get)	SID-Get-SID Authority Object	00 00 00 08 00 00 02 01 (SID)	None	Null	Null	00 00 00 08 00 00 02 01 (SID)
VU	VU	00 00 00 0B 00 00 00 00 (C_PIN table)	00 00 00 06 00 00 00 08 (Next)	Makers-Next-C_ PIN table	00 00 00 08 00 00 00 02 (Makers)	None	Null	Null	00 00 00 08 00 00 00 02 (Makers)
VU	VU	00 00 00 0B 00 00 00 01 (SID C_PIN object)	00 00 00 06 00 00 00 07 (Set)	SID_Set Self-Set-SID_C_ PIN object	00 00 00 08 00 00 8C 03 (SID_SetSelf)	None	Null	Null	00 00 00 08 00 00 02 01 (SID)
VU	VU	00 00 00 0B 00 00 84 02 (MSID C_PIN object)	00 00 00 06 00 00 00 06 (Get)	MSID_Get-Get-MSID C_PIN object	00 00 00 08 00 00 8C 04 (MSID_Get)	None	Null	Null	00 00 00 08 00 00 02 01 (SID)
VU	VU	00 00 00 09 00 00 00 03 (Makers Authority object)	00 00 00 06 00 00 00 07 (Set)	SID_SetMakers-Set-Makers Authority Object	00 00 00 08 00 00 8C 05 (SID_SetMakers)	None	Null	Null	00 00 00 08 00 00 02 01 (SID)
VU	VU	00 00 00 00 00 00 00 01 (ThisSP)	00 00 00 06 00 00 06 01 (Random)	Anybody-Random	00 00 00 08 00 00 00 01 (Anybody)	None	Null	Null	00 00 00 08 00 00 00 01 (Anybody)
VU[1]	VU	00 01 00 02 00 01 00 02	00 00 00 06 00 00 00 07	SID_Set_Dload	SID_SetPort	None	Null	Null	00 00 00 08 00 00 02 01 (SID)
VU[1]	VU	00 01 00 02 00 01 00 02	00 00 00 06 00 00 00 06	SID_GetDload	SID_GetPort	None	Null	Null	00 00 00 08 00 00 02 01 (SID)
VU	VU	00 01 00 02 00 01 00 01	00 00 00 06 00 00 00 07	SID_Makers_ SetDiag	SID_Makers_ SetDiag	None	Null	Null	00 00 00 08 00 00 02 01 (SID)
VU	VU	00 01 00 02 00 01 00 02	00 00 00 06 00 00 00 06	SID_Makers_ SetDiag	SID_Makers_ SetDiag	None	Null	Null	00 00 00 08 00 00 02 01 (SID)
VU[2]	VU	00 00 02 05 00 00 00 01 (AdminSP)	00 00 00 06 00 00 02 03 (Activate)	SID-Activate-AdminSP	00 00 00 08 00 00 02 01 (SID)	None	Null	Null	00 00 00 08 00 00 00 01 (Anybody)
VU[2]	VU	00 00 02 05 00 00 00 01 (AdminSP)	00 00 00 06 00 00 02 02 (Revert)	SID-Revert-AdminSP	00 00 00 08 00 00 02 01 (SID)	None	Null	Null	00 00 00 08 00 00 00 01 (Anybody)

[1] These lines are the additional entries required to implement the firmware download port.

[2] The last 2 lines of the table are the additional entries required to implement the Life Cycle model for between TCG Enterprise mode and BDE mode.

10.20.8 MSID

The MSID is set for each drive at the time of manufacturing to a random 32-byte value, based on TCG rules. The MSID is programmatically accessible via TCG tables. The MSID value is stored in the PIN column of the MSID C_PIN object.

10.20.9 Logging

Western Digital logging functions will not record any sensitive data such as customer plain text data, passwords, encryption keys or wrapping keys.

10.20.10 Number of Sessions

The Western Digital implementation supports 1 active session at a time. In the case when a session is active and a new session is requested, the drive answers the host with SP_BUSY. This covers the following 2 scenarios.

- If an SP is in session and an attempt is made to start a second session with the same SP.
- If an SP is in session and an attempt is made to start a second session with a different SP.

10.20.11 Number of Bands

The Enterprise SSC specification calls for support of up to 1023 bands. The Western Digital implementation supports a maximum of 15 bands (not including Band 0).

10.20.12 Number of COMIDs

The Western Digital Enterprise SSC implementation supports 2 COMIDs, the minimum requirement in the Enterprise SSC specification. Only 1 COMID can be in use at any time.

10.20.13 PSID

Western Digital SED enabled hard disk drives will include a 32-byte PSID number (and a machine-readable barcode encoding of the same) on the product label. The PSID number is used to provide evidence of physical presence when required by the product's security protocols (such as for the TCG-Revert and TCG-RevertSP operation) and is included on Western Digital SED enabled drives to enhance the product's security.

10.20.14 Locked and Unlocked Behavior

10.20.14.1 ATA Commands behavior

The table below describes how basic ATA commands behave on encryption drives in the locked and unlocked states by TCG Enterprise feature.

Table 77 Command table for TCG Enterprise device lock operation

Command	Locked Band	Unlocked Band	Notes
Check Power Mode	Executable	Executable	
Close Zone Ext	Command aborted	Executable	
Device Configuration Freeze Lock	Executable	Executable	
Device Configuration Identify	Executable	Executable	
Device Configuration Restore	Executable	Executable	
Device Configuration Set	Executable	Executable	
Download Microcode	*2	*2	Depends on DL port lock
Download Microcode DMA	*2	*2	Depends on DL port lock
Execute Device Diagnostic	Executable	Executable	
Finish Zone Ext	Command aborted	Executable	
Flush Cache	Executable	Executable	
Flush Cache Ext	Executable	Executable	
Get Physical Element Status	Executable	Executable	
Identify Device	Executable	Executable	
Idle	Executable	Executable	
Idle Immediate	Executable	Executable	
Initialize Device Parameters	Executable	Executable	
NCQ Non-Data – Abort NCQ Queue	Executable	Executable	
NCQ Non-Data – Deadline Handling	Executable	Executable	
NCQ Non-Data – Set Features	Executable	Executable	
NOP	Executable	Executable	
Open Zone Ext	Command aborted	Executable	
Overwrite Ext	Command aborted	*1	Any Band is Locked
Read Buffer	Executable	Executable	
Read Buffer DMA	Executable	Executable	
Read DMA	Command aborted	Executable	
Read DMA Ext	Command aborted	Executable	
Read FPDMA Queued	Command aborted	Executable	
Read Log Ext	Executable	Executable	
Read Log DMA Ext	Executable	Executable	
Read Multiple	Command aborted	Executable	
Read Multiple Ext	Command aborted	Executable	
Read Native Max Address	Executable	Executable	
Read Native Max Address Ext	Executable	Executable	
Read Sector(s)	Command aborted	Executable	
Read Sector(s) Ext	Command aborted	Executable	
Read Verify Sector(s)	Command aborted	Executable	
Read Verify Sector(s) Ext	Command aborted	Executable	

Command	Locked Band	Unlocked Band	Notes
Recalibrate	Executable	Executable	
Receive FPDMA Queued	Executable	Executable	
Remove Element and Truncate	Command aborted	Executable	
Report Zones Ext	Executable	Executable	
Request Sense Data Ext	Executable	Executable	
Restore Elements and Rebuild	Command aborted	Executable	
Sanitize Crypto Scramble Ext	Command aborted	Executable	
Sanitize Freeze Lock Ext	Command aborted	Executable	
Sanitize Overwrite Ext	Command aborted	Executable	
Sanitize Status Ext	Command aborted	Executable	
SCT Write Same	Command aborted	Executable	
SCT Error Recovery Control	Executable	Executable	
SCT Feature Control	Executable	Executable	
SCT Data Tables	Executable	Executable	
SCT Read Status	Executable	Executable	
Security Disable Password	Command aborted	Command aborted	Not support at TCG enable
Security Erase Prepare	Command aborted	Command aborted	Not support at TCG enable
Security Erase Unit	Command aborted	Command aborted	Not support at TCG enable
Security Freeze Lock	Command aborted	Command aborted	Not support at TCG enable
Security Set Password	Command aborted	Command aborted	Not support at TCG enable
Security Unlock	Command aborted	Command aborted	Not support at TCG enable
Seek	Executable	Executable	
Send FPDMA Queued	Executable	Executable	
Sense Condition	Executable	Executable	
Set Date and Time Ext	Executable	Executable	
Set Features	Executable	Executable	
Set Max Address	Executable	Executable	
Set Max Address Ext	Executable	Executable	
Set Max Freeze Lock	Command aborted	Executable	
Set Max Lock	Command aborted	Executable	
Set Max Set Password	Command aborted	Executable	
Set Max Unlock	Command aborted	Executable	
Set Multiple Mode	Executable	Executable	
Set Sector Configuration Ext	Command aborted	*1	Any Band is Locked
Sleep	Executable	Executable	
SMART Disable Operations	Executable	Executable	
SMART Enable/Disable Attribute Autosave	Executable	Executable	
SMART Enable/Disable Automatic Off-Line	Executable	Executable	
SMART Enable Operations	Executable	Executable	
SMART Execute Off-line Immediate	Command aborted	*1	Any Band is Locked
SMART Read Attribute Values	Executable	Executable	
SMART Read Attribute Thresholds	Executable	Executable	

Command	Locked Band	Unlocked Band	Notes
SMART Read Log	Executable	Executable	
SMART Return Status	Executable	Executable	
SMART Save Attribute Values	Executable	Executable	
SMART Write Log	Command aborted	Executable	
Standby	Executable	Executable	
Standby Immediate	Executable	Executable	
Trusted Receive	Executable	Executable	
Trusted Receive DMA	Executable	Executable	
Trusted Send	Executable	Executable	
Trusted Send DMA	Executable	Executable	
Write Buffer	Executable	Executable	
Write Buffer DMA	Executable	Executable	
Write DMA	Command aborted	Executable	
Write DMA Ext	Command aborted	Executable	
Write DMA FUA Ext	Command aborted	Executable	
Write FPDMA Queued	Command aborted	Executable	
Write Log Ext	Command aborted	Executable	Only SCT Write same
	Executable	Executable	The others
Write Log DMA Ext	Command aborted	Executable	Only SCT Write same
	Executable	Executable	The others
Write Multiple	Command aborted	Executable	
Write Multiple Ext	Command aborted	Executable	
Write Multiple FUA Ext	Command aborted	Executable	
Write Sector(s)	Command aborted	Executable	
Write Sector(s) Ext	Command aborted	Executable	
Write Uncorrectable Ext	Command aborted	Executable	
Zone Activate Ext	Executable if no user bands	Executable if no user bands	Security prerequisites not met if any user band resides in affected LBAs. Zero length result returned if band exists.
Zone Query Ext	Executable	Executable	

*1: Although the band is unlocked, command is aborted when any band is locked.
*2: This is dependency in state of FW DLOAD Port Locked. Command is aborted when port is locked.

10.20.14.2 TCG Enterprise SSC Commands

The table below describes how the required TCG Enterprise SSC commands behave on encryption drives in the locked and unlocked states. TCG Enterprise requires the implementation of the Base, Admin, Locking, and Crypto Templates.

Table 78 TCG Enterprise SSC Commands Behavior -1

Command	Description	Unlocked	Locked
Session Management	There are two types of sessions: 1) Read-Only session. (Not Supported) 2) Read-Write session. The SSC requires us to support Read-Write sessions. Read-Only session is not allowed. A session is always initiated by the host. See the “Write” parameter in the Start Session method description @ TCG Core 5.2.3.1 and see SSC requirement in SSC 6.2.1.2.		
Properties	Returns session properties to host.	N/A	N/A
Start Session	Start a session	N/A	N/A
Sync Session	Response to say session successfully started.	N/A	N/A
Close Session	End (Close) a session	N/A	N/A

Table 79 TCG Enterprise SSC Commands Behavior -2

Command	Description	unlocked	Locked
Discovery	Allows the host to discover a TCG drive, its properties, and table values.		
Level 0	Discovery request sent by host as IF-RCV command. Security Protocol = 0x01, COMID=0x0001	N/A	N/A
Level 1	Request basic TPER capabilities via properties using host messaging.	Uses properties method.	Uses properties method.
Level 2	TCG methods retrieve table cell values.	See methods below.	See methods below.

Table 80 TCG Enterprise SSC Commands Behavior -3

Command	Description	unlocked	Locked
Cryptographic Template			
Random	This is the only required method in the crypto template for SSC. It is a random number generator in software.	N/A - Not related to bands/data on drive. Authentication required.	N/A - Not related to bands/data on drive. Authentication required.

Table 81 TCG Enterprise SSC Commands Behavior -4

Command	Description	unlocked	Locked
Base Template	Mandatory		
Set	Sets a value in a table	N/A - table operations. Not related to bands/data on drive.	N/A - table operations. Not related to bands/data on drive.
Get	Gets (reads) a value in a table	N/A - table operations. Not related to bands/data on drive.	N/A - table operations. Not related to bands/data on drive.
ParamCheck LRC	TPer implements param check LRC (longitudinal Redundancy Check) on get/set method calls on PIN value	N/A	N/A
Next	Iterates over all the rows of a table. Method requires user to specify "where" (row in table) and a "count". If where not specified, 1st row in table is used. For count not specified, default is number of last row in table. Returns 0 or more row number/uidref pairs currently in use in table, per parameters specified.	N/A - table operations. Not related to bands/data on drive.	N/A – table operations. Not related to bands/data on drive.
Authenticate	Authenticate an authority within a session (session must have successfully begun).	Must be authorized.	Must be authorized.
GetACL	Returns contents of access controls association's ACL stored in Method Table. The result is a list of UIDREFS to ACE objects.	N/A - table operations. Not to do with bands/data on drive.	N/A – table operations. Not related to bands/data on drive.

Table 82 TCG Enterprise SSC Commands Behavior -5

Command	Description	Unlocked	Locked
Locking Template	Mandatory		
Erase	Cryptographically erases user data in a specified LBA range and resets the access control (locking) of that LBA range	Can erase if authorized.	Generates error.

Table 83 TCG Enterprise SSC Commands Behavior -6

Command	Description	TCG Inactivated	TCG Activated
Admin Template	Customer specific		
Activate	TCG Enterprise feature is activated from inactive mode (BDE mode) to activation mode. Note: Command is aborted at locked of ATA Security Feature, and command is received at unlocked ATA Security Feature, but Activation is prohibited	Must be authorized when ATA Security Feature is disabled	Command received but Activation is prohibited
Revert	TCG Enterprise feature is reverted from activation mode to inactive mode (BDE mode) Note: Command is aborted at locked of ATA Security Feature, and command is received at unlocked ATA Security Feature, but Activation is prohibited	Command received but Revert is prohibited	Can Revert if must be authorized

10.20.15 Error Codes

All error codes are compliant with the TCG Core specification and SIIS, except in the following case:

- The maximum sessions allowed at any single time is 1. When a session is active and a new session is requested, the drive answers the host with SP_BUSY, instead of NO_SESSIONS_AVAILABLE.

10.20.16 Life Cycle Model

A Life Cycle model for TCG is able to combine TCG and BDE (with ATA security feature) features in a single code and to switch back and forth between TCG and BDE modes. The Life Cycle model based on TCG Core specification [1] and TCG Opal SSC specification [4] is applied to TCG Enterprise.

10.20.16.1 Switching between TCG Enterprise ATA-Security Modes (ATA-Security Mode, formerly known as BDE-Mode)

Note: This section covers certain capabilities of the new generation of Western Digital Ultrastar Enhanced Drive Security products that is not commonly needed for typical use-cases.
The new generation of Western Digital Ultrastar Enhanced Drive Security products support ATA-Security (on SATA products) and TCG Enterprise SSC in a single drive, right out of the box. The drives support the ATA-Security and TCG interactions in accordance with the SIIS specification.
The factory default state of the drive is in ATA-Security SEC-1 state (which is ATA-Security DISABLED state), in this state, the drive can be either used/as an ATA-Security or TCG device.
Once a drive is personalized or configured for use in ATA-Security mode (e.g.: Set USER or MASTER PASSWORD ENABLED (SEC-4) state or LOCKED (SEC-5) state, etc.), all TCG LockingSP/Band operations will be blocked. Similarly, once a drive is personalized for use in TCG mode (e.g.: BANDMASTER / ERASEMASTER PIN changed/personalized, BANDs created, etc.), all ATA-Security operations will be blocked.

While there are ways to put the drive in its factory default state, the below list mechanism could be used to quickly put the drive in factory default state (from ATA-Security mode or TCG-mode).

10.20.16.1.1 TCG-Mode (TCG personalized state)

To revert the drive back to factory default state from TCG-mode, perform TCG Revert operation (see TCG commands section for details).
IMPORTANT NOTE: All the data on the drive will be lost.

10.20.16.1.2 ATA-Security Mode (ATA-Security personalized state)

To revert the drive back to factory default state from ATA-Security mode, perform SECURE ERASE UNIT command or put the drive in SEC-1 state (using DISABLE PASSWORD command).

10.20.16.2 ATA Security Feature Management

Command execution for ATA security feature is corresponded to TCG Life Cycle model (active or inactive), and for Trusted Receive command, Trusted Send command and those subcommands are depended on ATA security status. When TCG Enterprise is activated, the ATA security feature set is the same as not supported. And when the ATA security feature set is enabled, TCG Enterprise cannot be activated.
The values to set to Identify Device information are modified corresponding to ATA security status and TCG Life Cycle model.

10.20.17 Customer Specific Requirements

This specification does not cover customer-specific requirements. Customer-specific requirements are submitted by the customer to Western Digital in the form of a customer-specification document.

10.20.18 Switching between TCG Enterprise and ISE-mode

Note: This section covers certain capabilities of the new generation of Western Digital products that is not commonly needed in typical use-cases.
The new generation of Western Digital products can function as a simple SED with Instant Secure Erase feature support and also support TCG Enterprise SSC at the same time, right out of the box. The drives support the SANITIZE command with CRYPTO ERASE option (for Instant Secure Erase) or the non-instant way of OVERWRITE option to scrub/erase the drive. The drives also support TCG command interactions in accordance with the SIIS specification.
In the factory default state, the drive can be used out of the box as a plain SED drive with Instant Secure Erase (ISE) capability, while the drive also reports as TCG enabled/ready drive (thus allowing it to be recognized/detected as a TCG capable device by any standards based RAID controllers for example).

The drive is said to be in ISE-mode of operation, until such time any of the TCG Settings/configurations are accessed (on the LOCKING SP). Upon TCG LOCKING SP access (e.g.: Authenticating to BANDMASTER or ERASEMASTER or a TCG-Activate command is issued (though TCG-Activate is not necessary)), the drive is said to be in TCG-mode of operation.
The drive, though reports as TCG enabled/ready drive, will not enforce certain SIIS spec compliance unless the drive is (implicitly) used as a TCG drive or put in TCG-mode.

10.20.18.1 ISE-mode and TCG-mode

As stated above, the factory default state of the drive is ISE-mode (which the drive also reports as TCG enabled/read and responds to TCG commands and operations). If and when the drive is access as a TCG drive (by access LOCKING SP), the drive automatically goes into TCG-mode and fully support SIIS specification (including ReadLong/WriteLong behavior restrictions, and Western Digital unique Logical-Ports (e.g.: FW-Download port-locking etc.)).

While there are ways to put the drive in its factory default state, the below list mechanism could be used to quickly put the drive in factory default state.
To revert the drive back to factory default state from TCG-mode, perform TCG Revert operation (see TCG commands section for details).

IMPORTANT NOTE: All the data on the drive will be lost.

10.20.19 Block SID Authentication

If a Block SID Authentication command has been successfully executed, SID Authentication will be blocked. This feature based on TCG Storage Feature Set: Block SID Authentication Specification Version 1.00 Published Revision 1.00.
If Block SID Authentication is supported, Level 0 Discovery returns feature descriptor as Feature Code = 0402.
The Block SID Authentication command is delivered by the transport IF-SEND command. There is no IF-RECV response to the Block SID Authentication command.
The Block SID Authentication command is defined as follows:

Command: IF_SENF
Protocol ID: 0x02
Transfer Length: Non-zero
ComID: 0x0005
Byte 0: Clear Events (0 or 1)
Bytes 1 to Transfer Length -1: Reserved (00)

Block SID Authentication state will be cleared by Power Cycle or Revert Method. If a Block SID Authentication command issued with Clear Events = 1, Block SID Authentication state is also cleared by Hardware Reset.

10.21 Zone Device Feature Set

10.21.1 Overview

Zoned devices are accessed using LBAs. The LBAs are divided into ranges called zones. The entire capacity of a zoned device is organized into a set of contiguous, non-overlapping zones. Figure 14 shows a zoned device with n zones and m LBAs where LBA 0 is the lowest LBA of zone 0 and LBA m–1 is the highest LBA of zone n–1.

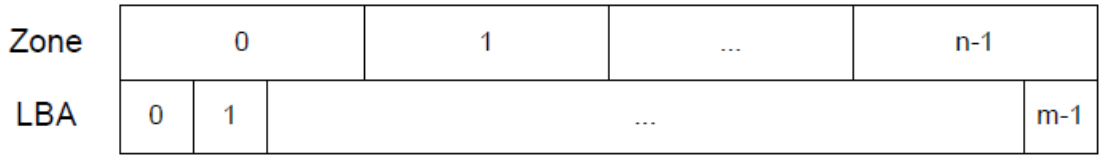

Figure 14 Zones in a Zoned Device

Each zone is one of the following types:

a) A Conventional zone (see Section); or
b) A Sequential Write Required zone (see Section).

The REPORT ZONES EXT command (see Section) returns the zone type for each zone.

10.21.2 Host Managed Zones Feature Set

The Host Managed Zones feature set relies on active host management of interactions with the device to maintain efficient operation of the device. Devices that support the Host Managed Zones feature set support the following feature sets defined in ACS-5:

a) the 48-bit Address feature set;
b) the General feature set;
c) the General Purpose Logging (GPL) feature set;
d) the Native Command Queuing (NCQ) feature set; and
e) the Power Management feature set.

Devices:

a) report the Host Managed Zone device signature (see ACS-5);
b) support at least one Sequential Write Required zone (see Section);
c) may support one or more Conventional zones (see Section);
d) support the Zoned Device Information page (see Section) in the IDENTIFY DEVICE data log (see ACS-5);
e) set the Zoned field to 00b in the Supported Capabilities page of the IDENTIFY DEVICE data log (see ACS-5);
f) support the Sense Data Reporting fautre set (see ACS-5) and shall:
    a. enable the Sense Data Reporting feature set suring the processing of any reset; and
    b. process the SET FEATURES Enable/Disable the Sense Data Reporting feature set subcommand as defined in ACS-5;
g) support the SCT Write Same command (see ACS-5);
h) support the CLOSE ZONE EXT command (see Section);
i) support the FINISH ZONE EXT command (see Section);
j) support the OPEN ZONE EXT command (see Section);
k) support the REPORT ZONES EXT command (see Section);
l) support the RESET WRITE POINTER EXT command (see Section 12.42);
m) if the NCQ feature set (see ACS-5) is supported, then:
    a. support the NCQ command encapsulations (see Section 10.15.4, 11.3, and ACS-5) for each command defined in Section xx that is supported in its non-NCQ form;

b. support NCQ autosense (i.e., set the NCQ AUTOSENSE SUPPORTED bit to one in the Serial ATA page of the IDENTIFY DEVICE data log (see ACS-5));
c. support page one of the NCQ Command Error log (see ACS-5); and
d. support the use of the NCQ command encapsulations of GPL feature set commands (see ACS-5) to read and write:
   i. the SCT Command/Status log (see ACS-5); and
   ii. the SCT Data Transfer log (see ACS-5);

If the device supports the Self-Monitoring, Analysis, and Reporting Technology (SMART) feature, then the device:
a) clear the SELECTIVE SELF-TEST IMPLEMENTED bit to zero in the Off-line data collection capabilities byte of the SMART data structure (see ACS-5);
b) not support the Selective Self-Test log (see ACS-5) ; and
c) not support the Extended SMART Self-Test log.

Devices that support the Host Managed Zones feature set shall not support the following feature sets:
a) the Accessible Max Address Configuration feature set (see ACS-5);
b) the Security feature set (see ACS-5) ; and
c) not Streaming feature set (see ACS-5).

Devices that support the Host Managed Zones feature set shall support the applicable features described in Section 10.21.

10.21.3 Zone Attributes

The zoned device zone attributes are summarized in the following table.

Table 84 Summary of zone attributes

Attribute	Description	Reference
Zone Type	Type of zone (e.g., CONVENTIONAL)	Section 10.21.3.1
Zone Condition	Zone's operational characteristics	Section 10.21.3.2
WPointer	Combination of the write pointer (see 10.21.4.3) and whether the write pointer is valid	Section 10.21.3.3
RWP Recommended	Indication of whether the processing of a RESET WRITE POINTER command (see 6.65.8) for this zone is recommended	Section 10.21.3.4
Non-Sequential Write Resources Active	Indication of whether zone resources are allocated for non-sequential writes	Section 10.21.3.5
Predicted Unrecovered Errors Present	Indication of whether predicted unrecovered errors (see ACS-5) are associated with logical sectors in the zone	Section 10.21.3.6

10.21.3.1 Zone Type Zone Attribute

Table 85 Zone Type zone attribute

Zone Type	Reference
CONVENTIONAL	Section 10.21.4.2
SEQUENTIAL WRITE REQUIRED	Section 10.21.4.3.2

The relationships between Zone Type and other Zone Attributes are shown in the following table.

Table 86 Relationships between Zone Attributes

Zone type	Other zone attributes			
	Non-Sequential Write Resources Active	RWP Recommended	WPointer	Zone Condition
CONVENTIONAL	false [a]	false [a]	Invalid [a]	
SEQUENTIAL WRITE REQUIRED	false [b]	see Section 10.21.4.3		

a. The zone attributes values for a Zone Type CONVENTIONAL zone are required to be compatible with devices that conform to ACS-5.
b. Zone resources for non-sequential writes are not allocated for a zone in which all non-sequential write operations are terminated with an error.

10.21.3.2 Zone Condition Zone Attribute

The Zone Condition is determined by the Zone Type (see Table 85) and the Zone Condition state machine state (see Section 10.21.4.3.3).

Table 87 Zone Condition zone attribute

Zone Type	Zone Condition state machine	Reference	Resulting Zone Condition
Conventional zones			
CONVENTIONAL	CMR1: Not Write Pointer	Section 10.21.4.2	NOT WRITE POINTER
	CMR2: Read Only state		READ ONLY
	CMR3: Offline state		OFFLINE
Write Pointer Zones			
SEQUENTIAL WRITE REQUIRED	ZC1: Empty state	Section 10.21.4.3.3.2	EMPTY
	ZC2: Implicit_Open	Section 10.21.4.3.3.3	IMPLICITLY OPENED
	ZC3: Explicit_Open	Section 10.21.4.3.3.4	EXPLICITLY OPENED
	ZC4: Closed state	Section 10.21.4.3.3.5	CLOSED
	ZC5: Full state	Section 10.21.4.3.3.6	FULL
	ZC6: Read_Only state	Section 10.21.4.3.3.7	READ ONLY
	ZC7: Offline state	Section 10.21.4.3.3.8	OFFLINE
	ZC8: Inactive state	Section 10.21.4.3.3.9	INACTIVE

10.21.3.3 WPointer Zone Attribute

For write pointer zones (see Section 10.21.4.3), WPointer is a combination of the write pointer (see Section 10.21.4.3) and whether the write pointer is valid (see Table 89).

If Zone Type is CONVENTIONAL the WPointer shall be invalid.

10.21.3.4 RWP Recommended Zone Attribute

For write pointer zones (see Section 10.21.4.3), if RWP Recommended is:

a) true, then the device has determined (e.g., through the detection of insufficient zone resources) that the processing of a RESET WRITE POINTER EXT command (see Section 12.42) specifying this zone is recommended; or
b) false, then the device has no recommendation for or against the processing of a RESET WRITE POINTER EXT command specifying this zone.

RWP Recommended shall be set to false if:

a) the Zone Type is CONVENTIONAL; or
b) the Zone Condition is EMPTY, READ ONLY, OFFLINE, or INACTIVE.

The device shall set the additional sense code to ZONE RESET WRITE POINTER RECOMMENDED, if:

a) a command completes without an error; and
b) the RWP Recommended attribute in at least one zone has changed from false to true since the last time a command completed without an error.

10.21.3.5 Non-Sequential Write Resources Active Zone Attribute

The Non-Sequential Write Resources Active shall be set to false if:

a) the Zone Type is CONVENTIONAL, SEQUENTIAL WRITE REQUIRED;
b) the Zone Condition is EMPTY, READ ONLY, OFFLINE, or INACTIVE; or
c) the device has not processed a non-sequential write command in a zone since the last time the Zone Condition was EMPTY.

10.21.3.6 Predicted Unrecovered Errors Present Zone Attribute

For If Predicted Unrecovered Errors Present is:

a) true, then the zone contains one or more logical sectors for which:
   A) read command accesses result in predicted unrecovered read error processing (see ACS-5); and
   B) write command accesses result in predicted unrecovered write error processing (see ACS-5);
   or
b) false, then none of the logical sectors in the zone are affected by predicted unrecovered error processing.

Predicted Unrecovered Errors Present is changed:

a) to true by depopulation with zone modifications processing as described in 4.9.13.2.2.2; and
b) to false by the Zone Condition becoming OFFLINE or INACTIVE.

If Predicted Unrecovered Errors Present is true, then: read commands and write commands may report predicted unrecovered errors in ranges of logical sectors as described in ACS-5.

If Predicted Unrecovered Errors Present is true, then:

a) read commands and write commands may report predicted unrecovered errors in ranges of logical sectors as described in ACS-5; and
b) RESET WRITE POINTER EXT commands (see 5.2.11) may change a write pointer zone's Zone Condition to OFFLINE instead of EMPTY.

Predicted Unrecovered Errors Present shall be set to false if:

a) the Zone Type is SEQUENTIAL WRITE REQUIRED; or
b) the Zone Condition is EMPTY, OFFLINE, or INACTIVE.

10.21.4 Zone Types

10.21.4.1 Overview

In a zoned block device, each zone:

a. has the zone attributes defined in Section 10.21.3; and
b. is one of the following zone types:
   a. a Conventional zone (see Section xx); or
   b. a Sequential Write Required zone (see Section xx).

The Zone Device Information page in the IDENTIFY DEVICE data log (see Section 12.25.17.10) contains bits that indicate which zone types are supported.

10.21.4.2 Conventional Zones

A Conventional zone is a type of zone:

a) that is not associated with a write pointer
b) for which the device processes commands as described in ACS-4.

10.21.4.3 Write Pointer Zones

10.21.4.3.1 Features Common to All Write Pointer Zones

10.21.4.3.1.1 General

A write pointer zone is a type of zone that maintains a write pointer that indicates a logical sector within that zone. The write pointer is updated as a result of processing of a write command. Depending on the state of a zone, the write pointer for that zone is or is not valid. (see Section)

Each write pointer zone has one write pointer. That write pointer indicates the LBA that the host should specify as the starting LBA of the next write command to that zone. Some commands (e.g., the RESET WRITE POINTER EXT command (see Section 12.42)) set the write pointer to the lowest LBA in the specified zone.

Each write pointer zone in a device is in one of the states defined by the Zone Condition state machine (see Section 10.21.4.3.3). The state of each zone is indicated by the Zone Condition (see Section 10.21.4) and affects the contents of the ZONE CONDITION field in the data returned by the REPORT ZONES EXT command (see Section 12.40)

Read commands that complete without an error do not affect the write pointer.

Figure 15 shows a write pointer zone where no LBAs have been written since the most recent time the Zone Condition was EMPTY with the write pointer set to the lowest LBA of that zone.

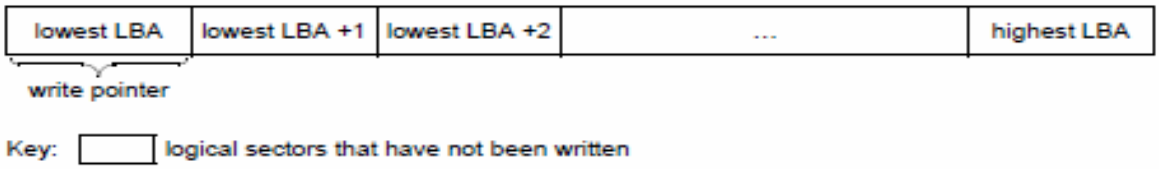

Figure 15 Write pointer zone and write pointer after Reset Write Pointer function with no subsequent writes

Figure 16 shows a write pointer zone where:

a) some LBAs have been written since the most recent time the Zone Condition was EMPTY (i.e., LBAs less than the write pointer value); and
b) other LBAs have not been written since the most recent time the Zone Condition was EMPTY (i.e., LBAs greater than or equal to the write pointer value).

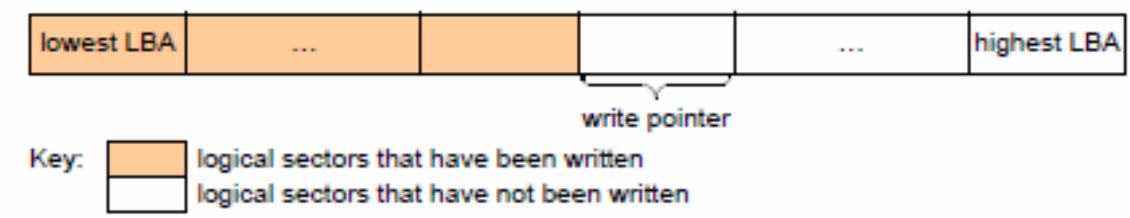

Figure 16 Write pointer zone and write pointer example

The example in
Figure 17 shows the effects of host actions on the write pointer and user data as follows:

1) at time 1, the write pointer zone starts in Zone Condition EMPTY with the write pointer set to the lowest LBA in that zone;
2) at time 2, a write command:
   a. changes the zone to Zone Condition IMPLICITLY OPENED; and
   b. writes user data starting at that zone's lowest LBA and sets the write pointer to the ending LBA written by the command plus one;
3) at time 3, a write command:
   a. writes user data that starts at the write pointer after time 2 and extends to the end of that zone;
   b. changes the zone to Zone Condition FULL; and
   c. changes the write pointer to invalid;
   and
4) at time 4, a RESET WRITE POINTER EXT command (see Section 12.42):
   a. sets the write pointer to the lowest LBA of that write pointer zone; and
   b. changes the zone to Zone Condition EMPTY.

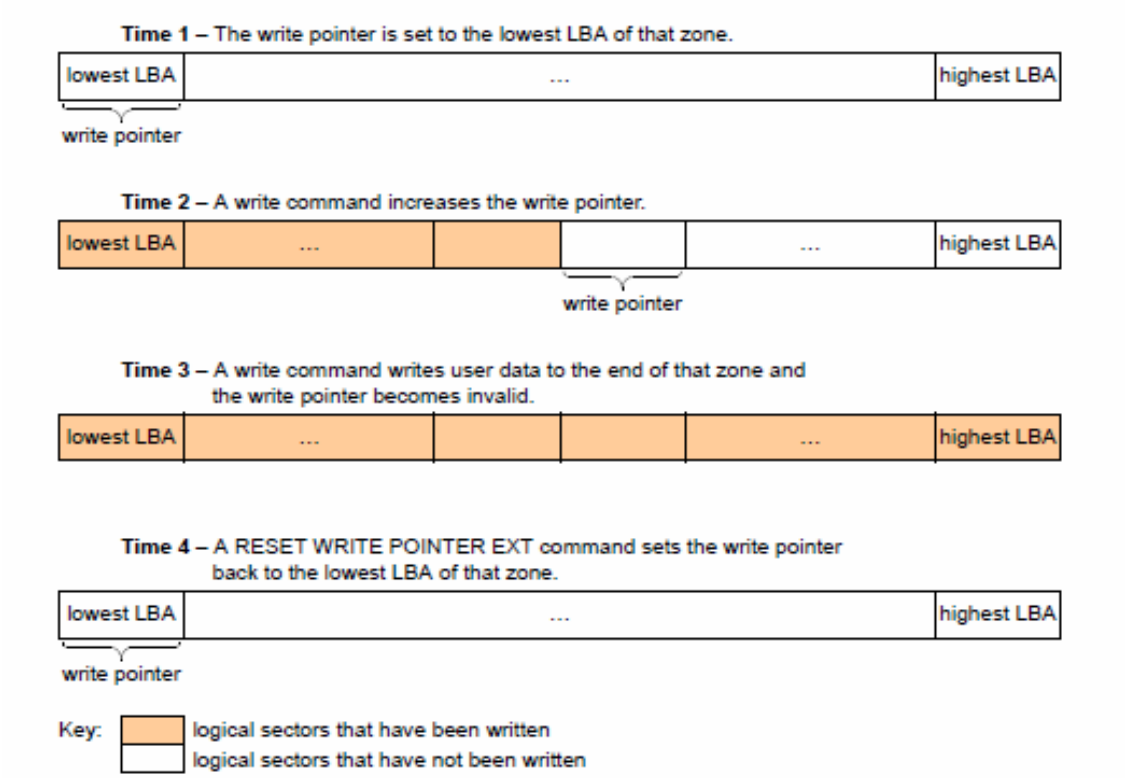

Figure 17 Examples of write commands that do not start at the write pointer

10.21.4.3.1.2 Resetting the Write Pointer

A RESET WRITE POINTER EXT command (see Section 12.42) sets the write pointer in a write pointer zone to the lowest LBA of that zone and changes the Zone Condition to EMPTY.

The following ACS-5 feature sets and commands set the write pointer in a write pointer zone to the lowest LBA of that zone and change the Zone Condition to EMPTY:

a) the Sanitize Device feature set (see Section 10.19.2);
b) the SECURITY ERASE UNIT command (see Section 12.47);
c) the SET SECTOR CONFIGURATION EXT command (see Section 12.59);
d) the SCT Write Same command (see Section 10.17.3.1).

10.21.4.3.1.3 Open Zone Resources

Open zone resources are zone resources that are available only to an open zone. The usage of open zone resources is managed by the Zone Condition state machine (see Section 10.21.4.3.3) using the Zone Conditions EXPLICITLY OPENED and IMPLICITLY OPENED. Open zone resources may be volatile.

The scarcity of open zone resources is associated with zone type, and this scarcity affects how those open zone resources are managed. The open zone resources for Sequential Write Required zones (see Section 10.21.4.3.2) limit the number of Sequential Write Required zones with a Zone Condition of EXPLICITLY OPENED or IMPLICITLY OPENED allowed at any specific time (see Section 4.21.4.3.3.3).

The availability of open zone resources is determined by performing a Manage Open Zone Resources function (see Section 4.21.4.3.4).

10.21.4.3.1.4 Errors Common to Access Pattern Requirements for All Write Pointer Zones

If the device processes a write command that specifies:

a) a starting LBA that is in one type of write pointer zone; and
b) access to a logical sector that is in a different type of zone,

then the device shall:

a) not write any data;
b) return command aborted with the additional sense code set to WRITE BOUNDARY VIOLATION; and
c) set the LBA of First Unrecoverable Error to the zone ID of a zone associated with the command whose zone type is different from the zone type specified by the starting LBA.

If the device processes a read command that specifies:

a) a starting LBA that is in one type of write pointer zone; and
b) access to a logical sector that is in a different type of zone,

then the device shall:

a) not read any data;
b) return command aborted with the additional sense code set to READ BOUNDARY VIOLATION; and
c) set the LBA of First Unrecoverable Error to the zone ID of a zone associated with the command whose zone type is different from the zone type specified by the starting LBA.

If a write command specifies the writing of one or more LBAs that are in a write pointer zone that has a Zone Condition of READ ONLY, OFFLINE, or INACTIVE, then the device shall:

a) not write any data;
b) return command aborted with the additional sense code set to:
    a. ZONE IS READ ONLY, if the Zone Condition is READ ONLY;
    b. ZONE IS OFFLINE, if the Zone Condition is OFFLINE; and
    c. ZONE IS INACTIVE, if the Zone Condition is inactive;

and

c) set the LBA of First Unrecoverable Error to the lesser of:

a. the starting LBA of the write command: or
b. the zone ID of a write pointer zone associated with the command that has a Zone Condition of READ, ONLY, OFFLINE, or INACTIVE.

If a read command specifies the reading of any LBA that is in a write pointer zone that has a Zone Condition of INACTIVE and the URSWRZ bit is:

a) cleared to zero, then the device shall:
   a. not read any data;
   b. return command aborted with the additional sense code set to ZONE IS INACTIVE; and
   c. set the LBA of First Unrecoverable Error to the lesser of:
      i. the starting LBA of the read command; or
      ii. the zone ID of a write pointer zone associated with the command that has a Zone Condition of INACTIVE; and
b) set to one, then the device shall:
   a. process all read command accesses to LBAs that are in a write pointer zone that is an inactive zone using the substitute data pattern for that write pointer zone; and
   b. not write any data for a read command that has the FUA bit, if any, set to one (see ACS-5).

The write command requirements for an SCT Write Same command that specifies all LBAs in the user data area are described in Section 4.9.10.

The command requirements for a WRITE UNCORRECTABLE EXT command (see ACS-5) are described in Section 12.83

10.21.4.3.2 Sequential Write Required Zones

A Sequential Write Required zone is a write pointer zone (see Section 10.21.4.3) in which the device requires that write commands specify a starting LBA that is equal to that zone's write pointer.

10.21.4.3.2.1 Writing in Sequential Write Required Zones

If the device processes a write command without error, the write pointer is modified to indicate the LBA where a subsequent write command within the Sequential Write Required zone is able to be performed.

If the ending LBA of a write command that completed without error is equal to the highest LBA of a Sequential Write Required zone, then the Zone Condition becomes FULL and the write pointer becomes invalid.

If a write command returns command completion with an error, the value of the write pointer may be unknown to the host. The device indicates the current write pointer in at least one of the following places:

a) the NCQ Command Error log (see ACS-5);
b) the LBA field of the error outputs (see Sections 10.21.4.3.1.4 and 10.21.4.3.2.2); and
c) the data returned by the REPORT ZONES EXT command (see Section 12.40).

If the device processes a write command with:

a) the starting LBA equal to the write pointer;
b) the ending LBA is in the same Sequential Write Required zone; and
c) an ending LBA that is equal to the last logical sector within a physical sector (see ACS-5), then the device shall process that write command.

If the device processes a write command with the starting LBA in a Sequential Write Required zone with the Zone Condition of FULL, then the device shall:

a) not write any data;
b) return command completion with an error; and
c) set the additional sense code to INVALID FIELD IN CDB (see ACS-5).

If the device processes a write command with:

a) the starting LBA in a Sequential Write Required zone that is not equal to the write pointer; or

b) an ending LBA that is not equal to the last logical sector within a physical sector (see ACS-5),

then the device shall:

a) not write any data;
b) return command aborted with the additional sense code set to UNALIGNED WRITE COMMAND; and
c) set the LBA of First Unrecoverable Error (see ACS-5) to the write pointer associated with the Sequential Write Required zone specified by the starting LBA in the command.

If the device processes a write command with an ending LBA that is not in the same Sequential Write Required zone as the starting LBA, then the device shall:

a) not write any data;
b) return command aborted with the additional sense code set to WRITE BOUNDARY VIOLATION and
c) set the LBA of First Unrecoverable Error to the first LBA of the zone that contains the ending LBA.

Other errors on write commands that affect all types of write pointer zones are described in Section 10.21.4.3.1.4

If a write command is not able to write all of the specified logical sectors before encountering an error that prevents further writing to the media, then the resulting value of the write pointer is outside the scope of this specification. The host should use the REPORT ZONES EXT command (see Section 12.40) to determine the current write pointer and other characteristics of the zone.

10.21.4.3.2.2 Reading in Sequential Write Required Zones

If the device processes a read command with:

a) the starting LBA in a Sequential Write Required zone; and
b) the ending LBA:
    A) in the same Sequential Write Required zone; and
    B) less than the write pointer,

then the device shall process that read command.

If the URSWRZ bit (see 12.25.17.10.1) is cleared to zero and device processes a read command with:

a) the starting LBA less than the write pointer and the ending LBA greater than or equal to the write pointer in the same zone, then the device shall:
    A) not read any data; and
    B) return command aborted with the additional sense code set to ATTEMPT TO READ INVALID DATA; and
    C) set the LBA of First Unrecoverable Error to the value of the write pointer in the same zone;
b) the starting LBA greater than or equal to the write pointer and the ending LBA in the same zone, then the device shall:
    A) not read any data; and
    B) return command aborted with the additional sense code set to ATTEMPT TO READ INVALID DATA; and
    C) set the LBA of First Unrecoverable Error to the starting LBA in the command; and
c) the ending LBA in a different Sequential Write Required zone than the starting LBA, then the device shall:
    A) not read any data;
    B) return command aborted with the additional sense code set to READ BOUNDARY VIOLATION (see 7.4.6); and
    C) set the LBA of First Unrecoverable Error to the first LBA of the zone that contains the ending LBA.

If the URSWRZ bit (see 12.25.17.10.1) is set to one and the device processes a read command:

a) with the starting LBA:
    A) less than the write pointer and the ending LBA greater than or equal to the write pointer in the same zone; or
    B) greater than or equal to the write pointer and the ending LBA in the same zone;

or

b) with:
    A) the ending LBA in a different Sequential Write Required zone than the starting LBA; and
    B) each LBA specified by the command in a Sequential Write Required zone,

then, for any LBA that:

a) contains user data (see ACS-5) written since the most recent time the Zone Condition was EMPTY for the zone being read, the device shall process the command using the stored data; or

b) does not contain user data written since the most recent time the Zone Condition was EMPTY for the zone being read, the device shall:
   A) process the command using the substitute data pattern for Sequential Write Required zones (see 10.21.4.3.2); and
   B) not write any data for a read command that has the FUA bit, if any, set to one (see ACS-5).

Other errors on write commands that affect all types of write pointer zones are described in Section 10.21.4.3.1.4

10.21.4.3.2.3 Substitute Data Pattern for Sequential Write Required Zones

The substitute data pattern is data that shall be set by:
a) The manufacturer; or
b) The most recent successful:
   a. OVERWRITE EXT command (see ACS-5), if any; or
   b. SCT Write Same commands (see Section xx) if any, with:
      i. a FUNCTION CODE field set to 0001h, 0002h, 0101h or 0102h; and
      ii. the WRITE AND SET SUBSTITUTE DATA PATTERN bit (see Section xx) set to one

10.21.4.3.2.4 Opening Sequential Write Required Zones

If the number of zones with Zone Condition EXPLICITLY OPENED is equal to the value in the MAXIMUM NUMBER OF OPEN SEQUENTIAL WRITE REQUIRED ZONES field (see Section 12.25.17.10), then any command (e.g., a write command) that attempts to cause a zone that is not an open zone to become an open zone is completed with an error as described in Section 10.21.4.3.4.

10.21.4.3.3 Zone Condition State Machine

10.21.4.3.3.1 Overview

There is one Zone Condition state machine for each write pointer zone (see Section 10.21.4.3). The Zone Condition state machine (see
Figure 18) controls the operational characteristics of each write pointer zone. This state machine consists of the following states:
a) ZC1: Empty state (see Section 10.21.4.3.3.2);
b) ZC2: Implicit_Open state (see Section 10.21.4.3.3.3);
c) ZC3: Explicit_Open state (see Section 10.21.4.3.3.4);
d) ZC4: Closed state (see Section 10.21.4.3.3.5);
e) ZC5: Full state (see Section 10.21.4.3.3.6);
f) ZC6: Read_Only state (see Section 10.21.4.3.3.7);
g) ZC7: Offline state (see Section 10.21.4.3.3.8); and
h) ZC8: Inactive state (see Section 10.21.4.3.3.9).

Except as specified in Section 10.21.1, the device shall maintain the zone state after processing all resets except a power-on reset (see ACS-5).

After a power-on reset, the initial state for each write pointer zone shall be:
a) the ZC1: Empty state for a zone in which:
   a. the write pointer is valid and indicates the lowest LBA in the zone; and
   b. Non-Sequential Write Resources Active is false;
b) the ZC2: Implicit_Open state for a zone in which in Zone Condition IMPLICITLY OPENED before the power-on reset;
c) the ZC4: Closed state for a zone in which:
   a. the write pointer is valid and indicates an LBA that is not the lowest LBA in the zone; or
   b. Non-Sequential Write Resources Active is true;
d) the ZC5: Full state for a zone in Zone Condition FULL before the power-on reset;

e) the ZC6: Read_Only state for a zone in Zone Condition READ ONLY before the power-on reset;
f) the ZC7: Offline state for a zone in Zone Condition OFFLINE before the power-on reset; and
g) the ZC8: Inactive state for a zone in the Zone Condition INACTIVE before the power-on reset.

On completion of a sanitize operation (see 10.19), for each write pointer zone whose Zone Condition is not changed as a result of processing the sanitize operation, that zone's state shall be:

a) the ZC1: Empty state for a zone in which:
   a. the write pointer is valid and indicates the lowest LBA in the zone; and
   b. Non-Sequential Write Resources Active is false;
b) the ZC2: Implicit_Open state for a zone in which the write pointer is valid and indicates an LBA that is not the lowest LBA in the zone;
c) the ZC4: Closed state for a zone in which:
   a. the write pointer is valid and indicates an LBA that is not the lowest LBA in the zone; or
   b. Non-Sequential Write Resources Active is true;
d) the ZC5: Full state for a zone in Zone Condition FULL before the sanitize operation;
e) the ZC6: Read_Only state for a zone in Zone Condition READ ONLY before the sanitize operation;
f) the ZC7: Offline state for a zone in Zone Condition OFFLINE before the sanitize operation; and
g) the ZC8: Inactive state for a zone in Zone Condition INACTIVE before the sanitize operation.

This state machine includes the functions shown in Table 88 to define the processing of tasks and provide interfaces for commands that may affect more than one zone as the result of processing one zone at a time.

Table 88 Zone Condition state machine functions

Function	Description	Reference
Manage Open Zone Resources function	Used by this state machine to limit the number of open zones, if required, by closing a zone with a Zone Condition of IMPLICITLY OPENED	Section 10.21.4.3.4
Explicitly Open Zone function	Used by commands (e.g., the OPEN ZONE EXT command (see Section 12.19)) to open a specified zone	Section 10.21.4.3.5
Close Zone function	Used by commands (e.g., the CLOSE ZONE EXT command (see Section 12.2)) to close a specified zone	Section 10.21.4.3.6
Finish Zone function	Used by commands (e.g., the FINISH ZONE EXT command (see Section 12.8)) to modify a specified zone so that its Zone Condition becomes FULL	Section 10.21.4.3.7
Reset Write Pointer function	Used by commands (e.g., the RESET WRITE POINTER EXT command (see Section 12.42)) to modify a specified zone such that its Zone Condition becomes EMPTY	Section 10.21.4.3.8

The characteristics and zone attributes associated with the state of a zone are summarized in Table 89.

Table 89 Characteristics and attributes associated with zone state

State	Zone characteristics			
	Write pointer valid [a]	Open zone resources in use	Accessible for	
			Reads	Writes
ZC1:Empty state	Yes	No	see [b]	see [c]
ZC2:Implicit_Open state	Yes	Yes	Yes	Yes
ZC3:Explicit_Open state	Yes	Yes	Yes	Yes
ZC4:Closed state	Yes	No	Yes	see [c]
ZC5:Full state	No	No	Yes	No
ZC6: Read_Only state	No	No	Yes	No
ZC7: Offline state	No	No	No	No
ZC8: Inactive state	No	No	see [b]	No

[a] A valid write pointer (i.e., Yes) indicates a specific LBA in the zone as described in 4.8.3.1. An invalid write pointer (i.e., No) indicates that the write pointer value should be ignored.

[b] This zone is accessible for reads if the URSWRZ bit is set to one (see Section xx)

[c] This zone is accessible for reads if the Manage Open Zone Resources function (see Section xx) is able to complete successfully and the zone transitions to the ZC2:Implicit_Open state.

This state machine shall maintain the OZR Available state machine variable to indicate the value returned by a Manage Open Zone Resources function (see Section 10.21.4.3.4).

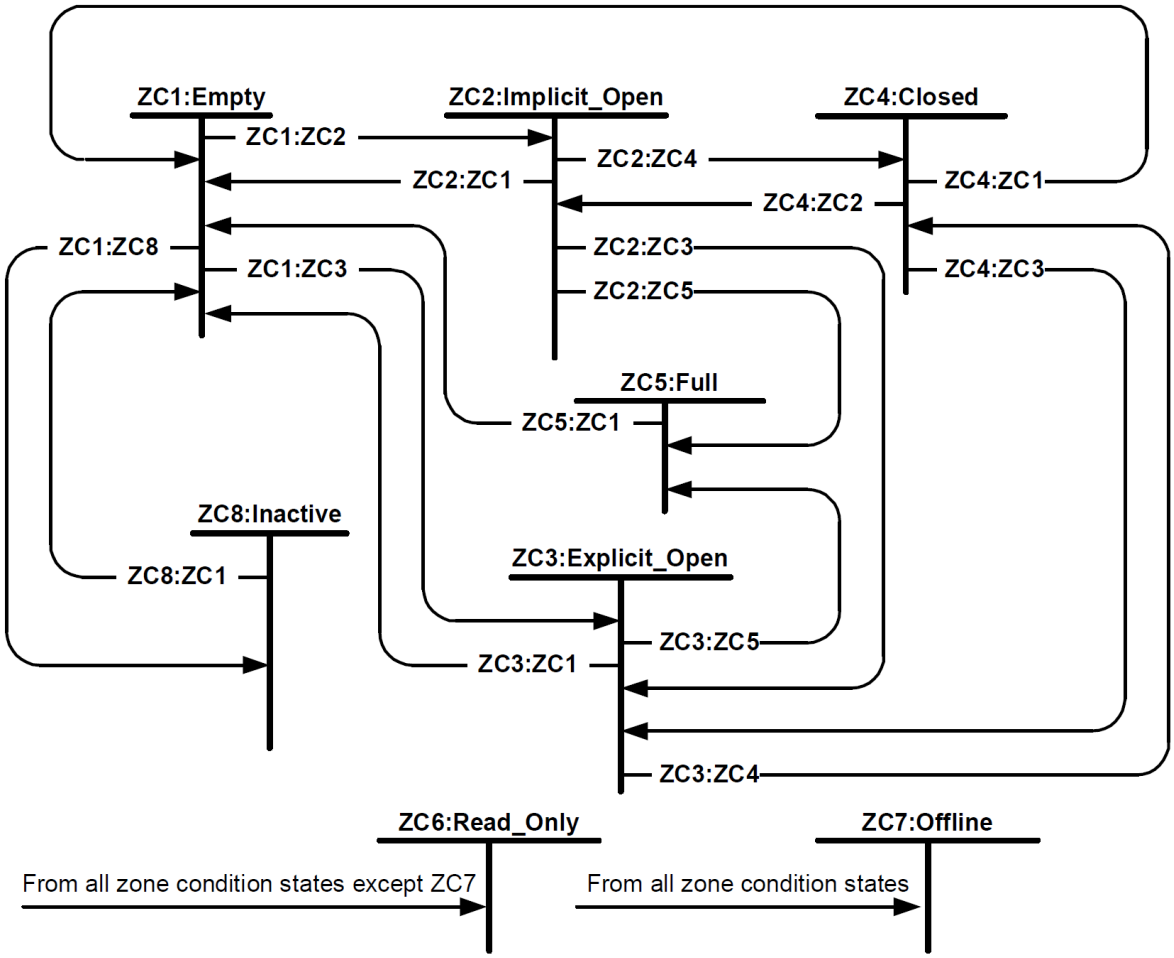

Figure 18 Zone Condition state machine

10.21.4.3.3.2 ZC1: Empty State

For a zone in this state:

a) Zone Condition shall be set to EMPTY;
b) the write pointer is valid and indicates the lowest LBA in the zone;
c) all zone resources (e.g., the write pointer) shall be persistent zone resources (i.e., open zone resources shall not be used);
d) RWP Recommended is set as defined in Section 10.21.3.4 (i.e., set to false);
e) Non-Sequential Write Resources Active is set as defined in Section 10.21.3.5 (i.e., set to false);
f) Predicted Unrecovered Errors Present is set as defined in Section 10.21.3.6 (i.e., set to false);
g) if the device:
    a. processes a write command with valid parameters;
    b. performs an Explicitly Open Zone function (see Section 10.21.4.3.5); or
    c. performs a Finish Zone function (see Section 10.21.4.3.7),

    then, the device shall:
        i. process a Manage Open Zone Resources function (see Section 10.21.4.3.4) and set the OZR Available state machine variable to the value returned by the function; and
        ii. if the OZR Available state machine variable is set to FAILURE, the device shall:
            1. return a failure result for an Explicitly Open Zone function or Finish Zone function; or
            2. for a write command:
                a. not write any data;
                b. return command aborted with the additional sense code set to INSUFFICIENT ZONE RESORCES (see ACS-5 and SPC-5);

    and
h) if the device processes a read command, then the device shall process the read command as described in Section 10.21.4.3.2.1 for Sequential Write Required zones.

Transition ZC1:ZC2: The zone shall transition from the ZC1: Empty state to the ZC2: Implicit_Open state (see Section 10.21.4.3.3.3) if:

a) the device successfully completes:
    a. a write command; or
    b. a Finish Zone function (see Section 10.21.4.3.7);
    and
b) the OZR Available state machine variable is set to SUCCESS.

Transition ZC1:ZC3: The zone shall transition from the ZC1: Empty state to the ZC3: Explicit_Open state (see Section 10.21.4.3.3.4) if:

a) the device begins to perform an Explicitly Open Zone function (see Section 10.21.4.3.5); and
b) the OZR Available state machine variable is set to SUCCESS.

Transition ZC1:ZC6: The zone may transition from the ZC1: Empty state to the ZC6: Read_Only state (see Section 10.21.4.3.3.7) for reasons outside the scope of this standard.

Transition ZC1:ZC7: The zone may transition from the ZC1: Empty state to the ZC7: Offline state (see Section 10.21.4.3.3.8):

a) as the result of the device detecting a media failure (see Section 10.21.5.3); or
b) as the result of processing a REMOVE ELEMENT AND MODIFY ZONES command; or
c) for reasons outside the scope of this standard.

Transition ZC1:ZC8: The zone may transition from the ZC1: Empty state to the ZC8: Inactive state (see Section 10.21.4.3.3.9) as the result of processing a ZONE ACTIVATE EXT command (see Section 11.4) that deactivates this zone.

10.21.4.3.3.3 ZC2: Implicit Open State

For a zone in this state:

a) Zone Condition shall be set to IMPLICITLY OPENED;
b) the write pointer (see Section 10.21.4.3) is valid;
c) all zone resources (e.g., the write pointer) shall be open zone resources, persistent zone resources, or both (i.e., this zone uses the open zone resources allocated to it);
d) RWP Recommended is set as defined in Section 10.21.3.4 (i.e., set to false);
e) Non-Sequential Write Resources Active is set as defined in Section 10.21.3.5 (i.e., set to false);
f) Predicted Unrecovered Errors Present is set as defined in Section 10.21.3.6 (i.e., set to false);
g) if the device processes a write command, then the device shall process the write command as described in Section 10.21.4.3.2.1 for Sequential Write Required zones, and
h) if the device processes a read command, then the device shall process the read command as described in Section 4.21.6.3.3.2 for Sequential Write Required zones.

If this state is entered as the result of a ZC1:ZC2 transition or a ZC4:ZC2 transition, the device shall continue processing the write command or Finish Zone function in this state.

Transition ZC2:ZC1: The zone shall transition from the ZC2: Implicit_Open state to the ZC1: Empty state (see Section 10.21.4.3.3.2):

a) after successful completion of a Reset Write Pointer function (see Section 10.21.4.3.8) for this zone; or
b) if the write pointer indicates the lowest LBA in the zone and Non-Sequential Write Resources Active is false, then after successful completion of:
   A) a Close Zone function (see Section 10.21.4.3.6) for this zone; or
   B) a Manage Open Zone Resources function (see Section 10.21.4.3.4) for a different zone that selects and closes this zone.

Transition ZC2:ZC3: The zone shall transition from the ZC2: Implicit_Open state to the ZC3: Explicit_Open state (see 10.21.4.3.3.4) after successful completion of an Explicitly Open Zone function (see Section 10.21.4.3.5).

Transition ZC2:ZC4: If the write pointer does not indicate the lowest LBA in the zone or Non-Sequential Write Resources Active is true, then the zone shall transition from the ZC2: Implicit_Open state to the ZC4: Closed state (see Section 10.21.4.3.3.5) after successful completion of:

a) a Close Zone function (see Section 10.21.4.3.6) for this zone; or
b) a Manage Open Zone Resources function (see Section 10.21.4.3.4) for a different zone that selects and closes this zone.

Transition ZC2:ZC5: The zone shall transition from the ZC2:
Implicit_Open state to the ZC5: Full state (see Section 10.21.4.3.3.6) after successful completion of:

a) a Finish Zone function (see Section 10.21.4.3.7); or
b) a write command with the starting LBA equal to the write pointer that writes the highest LBA in the zone.

Transition ZC2:ZC6: The zone may transition from the ZC2: Implicit_Open state to the ZC6: Read_Only state (see Section 4.8.3.5.7) for reasons outside the scope of this standard.

Transition ZC2:ZC7: The zone may transition from the ZC2: Implicit_Open state to the ZC7: Offline state (see Section 10.21.4.3.3.8):

a) as the result of the device detecting a media failure (see Section 10.21.5.3); or
b) as the result of processing a REMOVE ELEMENT AND MODIFY ZONES command; or
c) for reasons outside the scope of this standard.

10.21.4.3.3.4 ZC3: Explicit_Open State

For a zone in this state:
a) Zone Condition shall be set to EXPLICITLY OPENED;
b) the write pointer (see Section 10.21.4.3) is valid;
c) all zone resources (e.g., the write pointer) shall be open zone resources, persistent zone resources, or both (i.e., this zone uses the open zone resources allocated to it);
d) RWP Recommended is set as defined in Section 10.21.3.4 (i.e., set to false);
e) Non-Sequential Write Resources Active is set as defined in Section 10.21.3.5 (i.e., set to false);
f) Predicted Unrecovered Errors Present is set as defined in Section 10.21.3.6 (i.e., set to false);
g) if the device processes a write command, then the device shall process the write command as described in Section 10.21.4.3.2.1 for Sequential Write Required zones;
and
h) if the device processes a read command, then the device shall process the read command as described in Section 4.21.6.3.3.2 for Sequential Write Required zone.

Transition ZC3:ZC1: The zone shall transition from the ZC3: Explicit_Open state to the ZC1: Empty state (see Section 10.21.4.3.3.2):
a) after successful completion of a Reset Write Pointer function (see Section 10.21.4.3.8); or
b) if the write pointer indicates the lowest LBA in the zone and Non-Sequential Write Resources Active is false, then after successful completion of a Close Zone function (see Section 10.21.4.3.6).

Transition ZC3:ZC4: If the write pointer does not indicate the lowest LBA in the zone, then the zone shall transition from the ZC2: Implicit_Open state to the ZC4: Closed state (see Section 10.21.4.3.3.5) after successful completion of a Close Zone function (see Section 10.21.4.3.6).

Transition ZC3:ZC5: The zone shall transition from the ZC3:
Explicit_Open state to the ZC5: Full state (see 10.21.4.3.3.6) after successful completion of:
a) a Finish Zone function (see 10.21.4.3.7); or
b) a write command with the starting LBA equal to the write pointer that writes the highest LBA in the zone.

Transition ZC3:ZC6: The zone may transition from the ZC3: Explicit_Open state to the ZC6: Read_Only state (see Section 10.21.4.3.3.7) for reasons outside the scope of this standard.

Transition ZC3:ZC7: The zone may transition from the ZC3: Explicit_Open state to the ZC7: Offline state (see Section 4.8.3.5.8):
a) as the result of the device detecting a media failure (see Section 10.21.5.3); or
b) as the result of processing a REMOVE ELEMENT AND MODIFY ZONES command
c) for reasons outside the scope of this standard.

10.21.4.3.3.5 ZC4: Closed State

For a zone in this state:
a) Zone Condition shall be set to CLOSED;
b) the write pointer (see Section 10.21.4.3) is valid;
c) all zone resources (e.g., the write pointer) shall be persistent zone resources (i.e., open zone resources shall not be used);
d) all user data shall be written to the zone in non-volatile storage (e.g., by performing the equivalent of a flush command (see ACS-5));
e) RWP Recommended is set as defined in Section 10.21.3.4 (i.e., set to false);
f) Non-Sequential Write Resources Active is set as defined in Section 10.21.3.5 (i.e., set to false);
g) Predicted Unrecovered Errors Present is set as defined in Section 10.21.3.6 (i.e., set to false);
h) if the device begins to process:
A) a write command with valid parameters;
B) an Explicitly Open Zone function (see Section 10.21.4.3.5); or
C) a Finish Zone function (see Section 10.21.4.3.7),
then, the device shall:

1) process a Manage Open Zone Resources function (see Section 10.21.4.3.4) and set the OZR Available state machine variable to the value returned by the function; and
2) if the OZR Available state machine variable is set to FAILURE, then the device shall:
a) return a failure result for an Explicitly Open Zone function or Finish Zone function; or
b) for a write command:
A) not write any data;
B) return command aborted with the additional sense code set to INSUFFICIENT ZONE (see ACS-5 and SPC-5);

i) if the device processes a read command, then the device shall process the read command as described in Section 10.21.4.3.2.1 for Sequential Write Required zones.

Transition ZC4:ZC1: The zone shall transition from the ZC4: Closed state to the ZC1: Empty state (see Section 10.21.4.3.3.2) after successful completion of a Reset Write Pointer function (see Section 10.21.4.3.8).

Transition ZC4:ZC2: The zone shall transition from the ZC4: Closed state to the ZC2: Implicit_Open state (see Section 10.21.4.3.3.3) if:
a) the device successfully completes:
A) a write command; or
B) a Finish Zone function (see Section 10.21.4.3.7);
And
b) the OZR Available state machine variable is set to SUCCESS.

Transition ZC4:ZC3: The zone shall transition from the ZC4: Closed state to the ZC3: Explicit_Open state (see Section 10.21.4.3.3.4) if:
a) the device begins to perform an Explicitly Open Zone function (see Section 10.21.4.3.5); and
b) the OZR Available state machine variable is set to SUCCESS.

Transition ZC4:ZC6: The zone may transition from the ZC4: Closed state to the ZC6: Read_Only state (see Section 10.21.4.3.3.7) for reasons outside the scope of this standard.

Transition ZC4:ZC7: The zone may transition from the ZC4: Closed state to the ZC7: Offline state (see 10.21.4.3.3.8):
a) as the result of the device detecting a media failure (see Section 10.21.5.3); or
b) as the result of processing a REMOVE ELEMENT AND MODIFY ZONES command
c) for reasons outside the scope of this standard.

10.21.4.3.3.6 ZC5: Full State

For a zone in this state:
a) Zone Condition shall be set to FULL;
b) the write pointer is invalid;
c) all LBAs in the zone are able to return data in response to a read command;
d) all zone resources (e.g., the write pointer) shall be persistent zone resources (i.e., open zone resources shall not be used);
e) RWP Recommended is set as defined in Section 10.21.3.4 (i.e., set to false);
f) Non-Sequential Write Resources Active is set as defined in Section 10.21.3.5 (i.e., set to false);
g) Predicted Unrecovered Errors Present is set as defined in Section 10.21.3.6 (i.e., set to false);
h) if the device processes a write command, the device shall:
a) Not write any data;
b) Return completion with an error; and
c) Set the sense keu to ILLEGAL REQUESTf and the additional sense code to INVALID FIELD IN CDB (see ACS-5 and SPC-6);
i) if the device processes a read command, then the device shall process the read command as described in Section 10.21.4.3.2.1 for Sequential Write Required zones.

Transition ZC5:ZC1: The zone shall transition from the ZC5: Full state to the ZC1: Empty state (see 10.21.4.3.3.2) after successful completion of a Reset Write Pointer function (see Section 10.21.4.3.8).

Transition ZC5:ZC6: The zone may transition from the ZC5: Full state to the ZC6: Read Only state (see Section 10.21.4.3.3.7) for reasons outside the scope of this standard.

Transition ZC5:ZC7: The zone may transition from the ZC5: Full state to the ZC7: Offline state (see 10.21.4.3.3.8):

a) as the result of the device detecting a media failure (see Section 10.21.5.3); or
b) as the result of processing a REMOVE ELEMENT AND MODIFY ZONES command
c) for reasons outside the scope of this standard.

10.21.4.3.3.7 ZC6: Read_Only State

For a zone in this state:

a) Zone Condition shall be set to READ ONLY;
b) the write pointer is invalid;
c) all zone resources (e.g., the write pointer) shall be persistent zone resources (i.e., open zone resources shall not be used);
d) RWP Recommended is set as defined in Section 10.21.3.4 (i.e., set to false);
e) Non-Sequential Write Resources Active is set as defined in Section 10.21.3.5 (i.e., set to false);
f) Predicted Unrecovered Errors Present is set as defined in Section 10.21.3.6 (i.e., set to false);
g) if the device processes a write command or a FINISH ZONE EXT command (see 12.8), the device shall:
   a. not write any data;
   b. return command aborted with the additional sense code set to ZONE IS READ ONLY (see Section 7.4.15); and
   c. set the LBA of First Unrecoverable Error to the value of the LBA field in the command; and
h) if the device processes a read command, then the device shall process the read command as described in Section 10.21.4.3.2.1 for Sequential Write Required zones; and

With the exception of transitions to the ZC7: Offline state (see Section 10.21.4.3.3.8), transitions out of this state are outside the scope of this standard.

Transition ZC6:ZC7: The zone may transition from the ZC6: Read_Only state to the ZC7: Offline state (see Section 10.21.4.3.3.8):

a) as the result of the device detecting a media failure (see Section 10.21.5.3);
b) as the result of performing a sanitize operation (see Section 10.19);
c) as the result of processing a REMOVE ELEMENT AND MODIFY ZONES command; or
d) for reasons outside the scope of this standard.

10.21.4.3.3.8 ZC7: Offline State

For a zone in this state:

a) Zone Condition shall be set to OFFLINE;
b) the write pointer is invalid;
c) all zone resources (e.g., the write pointer) shall be persistent zone resources (i.e., open zone resources shall not be used);
d) RWP Recommended is set as defined in Section 10.21.3.4 (i.e., set to false);
e) Non-Sequential Write Resources Active is set as defined in Section 10.21.3.5 (i.e., set to false);
f) Predicted Unrecovered Errors Present is set as defined in Section 10.21.3.6 (i.e., set to false);
g) if a device processes a read command, a write command, or a FINISH ZONE EXT command (see Section 12.8), then the device shall:
   a. return command aborted with the additional sense code set to ZONE IS OFFLINE (see Section 12.25.3.7); and
   b. set the LBA of First Unrecoverable Error to the value of the LBA field in the command.

Transitions out of this state are outside the scope of this standard.

10.21.4.3.3.9 ZC8: Inactive State

For a zone in this state:
a) Zone Condition shall be set to INACTIVE;
b) the write pointer (see Section 4.8.3.1) is invalid;
c) all zone resources (e.g., the write pointer) shall be persistent zone resources (i.e., open zone resources shall not be used);
d) RWP Recommended is set as defined in Section 10.21.3.4 (i.e., set to false);
e) Non-Sequential Write Resources Active is set as defined in Section 10.21.3.5 (i.e., set to false);
f) Predicted Unrecovered Errors Present is set as defined in Section 10.21.3.6 (i.e., set to false);
g) if the device processes a read command, then the device shall process the read command as described in Section 4.8.3.1.4; and
h) if the device processes a write command or a FINISH ZONE EXT command (see Section 12.8), then the device shall:
   a. return command completion with an error; and
   b. set the additional sense code to ZONE IS INACTIVE

Transition ZC8:ZC1: The zone may transition from the ZC8: Inactive state to the ZC1: Empty state (see Section 10.21.4.3.3.2) as the result of processing a ZONE ACTIVATE EXT command (see Section 12.84) that activates this zone.

10.21.4.3.4 Manage Open Zone Resources Function

10.21.4.3.4.1 Overview

The Manage Open Zone Resources function provides a way for the Zone Condition state machine to allow a zone to become an open zone while maintaining the limits on the number of open zones that the device indicates in the MAXIMUM NUMBER OF OPEN SEQUENTIAL WRITE REQUIRED ZONES field (see Section 12.25.17.10).

Performing a Manage Open Zone Resources function is requested only within the Zone Condition state machine.

The Manage Open Zone Resources function shall return:
a) SUCCESS to indicate that sufficient open zone resources are available to allow a Zone Condition to become IMPLICITLY OPENED or EXPLICITLY OPENED; or
b) FAILURE to indicate that insufficient open zone resources are available to allow a Zone Condition to become IMPLICITLY OPENED or EXPLICITLY OPENED.

The Manage Open Zone Resources function:
a) determines whether open zone resources are available to allow a zone to become an open zone; and
b) may close a zone with a Zone Condition of IMPLICITLY OPENED in order to make open zone resources available.

As detailed in Section 10.21.4.3.2 for a Sequential Write Required zone, the Manage Open Zone Resources function returns SUCCESS if:
a) closing a zone is not required in order to limit the number of open zones; or
b) a zone is closed in order to limit the number of open zones.

Otherwise, the Manage Open Zone Resources function returns FAILURE.

10.21.4.3.4.2 Processing a Sequential Write Required Zone

If equation (1) evaluates to true, then:
a) the device should not select a zone to be closed; and
b) the function shall return SUCCESS.

$$max > (explicit_r + implicit_r) \quad (1)$$

where:

$explicit_r$ is the number of Sequential Write Required zones (see Section 10.21.4.3.2) with a Zone Condition of EXPLICITLY OPENED;

$implicit_r$ is the number of Sequential Write Required zones with a Zone Condition of IMPLICITLY OPENED; and

max is the contents of the MAXIMUM NUMBER OF OPEN SEQUENTIAL WRITE REQUIRED ZONES field (see Section 12.25.17.10).

If equation (2) evaluates to true, the function shall return FAILURE.

$$\max \leq \text{explicitr} \qquad (2)$$

where:
$explicit_r$ is the number of Sequential Write Required zones (see 10.21.4.3.2) with a Zone Condition of EXPLICITLY OPENED; and

max is the contents of the MAXIMUM NUMBER OF OPEN SEQUENTIAL WRITE REQUIRED ZONES field (see Section 12.25.17.10).

If equation (3) evaluates to true, then:

a) the device shall choose a Sequential Write Required zone with a Zone Condition of IMPLICITLY OPENED and perform a Close Zone function (see Section 10.21.4.3.6) on that zone; and
b) the Manage Open Zone Resources function shall return SUCCESS.

$$(\max \leq (explicit_r + implicit_r)) \text{ AND } (0 < implicit_r) \qquad (3)$$

where:
$explicit_r$ is the number of Sequential Write Required zones (see Section 10.21.4.3.2) with a Zone Condition of EXPLICITLY OPENED;

$implicit_r$ is the number of Sequential Write Required zones with a Zone Condition of IMPLICITLY OPENED; and

max is the contents of the MAXIMUM NUMBER OF OPEN SEQUENTIAL WRITE REQUIRED ZONES field (see Section 12.25.17.10).

10.21.4.3.5 Explicitly Open Zone Function

The Explicitly Open Zone function prepares a Sequential Write Required zone for writing (e.g., by allocating any open zone resources associated with a write pointer zone).

Prior to performing an open zone operation, the zone condition state machine requires the device to perform a manage open zone resources function (see Section 10.21.4.3.4).

For the specified zone:

1) if the Manage Open Zone Resources function returned FAILURE, then the Explicitly Open Zone function shall return FAILURE;
2) if the Manage Open Zone Resources function returned SUCCESS, then:
    1) the Zone Condition for that zone shall become EXPLICITLY OPENED; and
    2) the Explicitly Open Zone function shall return SUCCESS.

An Explicitly Open Zone function is allowed to be processed on a zone with a Zone Condition of EXPLICITLY OPENED. This has no effect and is not considered to be an error.

10.21.4.3.6 Close Zone Function

A successful Close Zone function annuls any preparations made for writing an open Sequential Write Required zone (e.g., by deallocating any open zone resources associated with a write pointer zone).

As a result of a successful Close Zone function, the following become non-volatile:

a) the write pointer for the specified write pointer zone; and
b) all user data stored in the specified write pointer zone.

For the specified zone, performing this function (e.g., as shown in the ZC2: Implicit_Open state (see Section 10.21.4.3.3.3)) results in the Zone Condition for the specified zone becoming:
a) EMPTY, if the write pointer indicates the lowest LBA in the zone; or
b) CLOSED, if the write pointer does not indicate the lowest LBA in the zone.

A Close Zone function is allowed to be processed on a zone with a Zone Condition of CLOSED. Such an operation has no effect and is not considered to be an error.

10.21.4.3.7 Finish Zone Function

The result of a successful Finish Zone function is:
a) the Zone Condition becomes FULL; and
b) all user data in the zone becomes non-volatile and available for reading.

The device shall process the Finish Zone function for the specified zone as follows:
1) if the Zone Condition is EMPTY or CLOSED, perform the processing described in Sections 10.21.4.3.3.2 and 10.21.4.3.3.5;
and
2) if the Zone Condition after processing step 1) is EXPLICITLY OPENED or IMPLICITLY OPENED, then:
A) subsequent reads that specify logical sectors in the zone that have not been written since the last time the Zone Condition was EMPTY shall return the substitute data pattern (see Section 10.21.4.3.2.3); and
B) the Zone Condition for the specified zone becomes FULL.

A finish zone function that is performed on a zone with a Zone Condition of FULL has no effect and is not considered to be an error.

10.21.4.3.8 Reset Write Pointer Function

A successful Reset Write Pointer function results in the Zone Condition becoming EMPTY (i.e., the write pointer is set to the lowest LBA in the zone and the write pointer becomes valid) for the specified zone.

A Reset Write Pointer function that is performed on a zone with a Zone Condition of EMPTY has no effect and is not considered to be an error.

10.21.5 Additional Feature Set Interactions

10.21.5.1 Zoned Device Internal Resource Management

A device that supports the Host Managed Zones feature set (see Section 10.1) requires internal resources (e.g., persistent zone resources) to maintain each zone. Insufficient resources may result in degraded functionality (e.g., reduced performance, increased power consumption, or increased reporting of write errors).

A RESET bit set to one in a zone descriptor (see Section 12.40.4.4) indicates that an insufficient resources condition has been detected for that zone.

A host that detects the RESET bit being set to one may respond by sending a RESET WRITE POINTER EXT command (see Section 12.42) that specifies the affected zone. Before sending the RESET WRITE POINTER EXT command, the host may copy the user data in the affected zone to another location.

10.21.5.2 Unexpected Power Removal

If power is removed from a zoned device and:
a) there are partially completed commands that result in writing the non-volatile media;
b) there is user data in volatile write cache; or
c) zone attributes for completed write commands are not stored in persistent zone resources,

then an unexpected power removal condition has occurred.

An unexpected power removal condition results in zone attributes for partially completed write commands being updated to reflect the partial user data written to the medium (e.g., a write pointer indicates the LBA plus one of the last logical sector that the device attempted to write before the unexpected power removal condition).

If:
1) the device has non-volatile media;
2) all write cache is non-volatile (i.e., the NON-VOLATILE WRITE CACHE ENABLED bit (see ACS-5) is set to one) or the volatile write cache is disabled (i.e., the VOLATILE WRITE CACHE ENABLED bit (see ACS-5) is cleared to zero);
3) a write command completes without error; and
4) an unexpected power removal occurs,

then, after power is restored, a read command that completes without error for any LBA included in that write command shall return the user data that was written by that write command before the unexpected power removal.

If:
1) the device has non-volatile media;
2) a write FUA command completes without error; and
3) an unexpected power removal occurs,

then, after power is restored, a read command that completes without error for any LBA included in that write FUA command shall return the user data that was written by that write FUA command before the unexpected power removal.

If:
1) the device has non-volatile media;
2) a write command completes without error;
3) a subsequent flush command completes without error; and
4) an unexpected power removal occurs,

then, after power is restored, a read command that completes without error for any LBA included in that write command shall return the user data that was written by that write command before the unexpected power removal.

For Sequential Write Required zones (see Section 10.21.4.3.2), if an unexpected power removal results in unwritten logical sectors in LBAs less than the write pointer for a zone and a subsequent read command accesses those unwritten logical sectors, then the device shall return command aborted with the additional sense code set to UNWRITTEN DATA IN ZONE.

After an unexpected power removal condition, the data transferred to the host by a REPORT ZONES EXT command (see Section 12.40) contains the write pointers that do not correspond to the ending LBA plus one of the last command to report completion prior to the unexpected power removal condition.

10.21.5.3 Media Failure

If a zoned device detects a media failure that affects one or more write pointer zones, then the device may indicate that those zones are unavailable for reading or writing by changing the Zone Condition to OFFLINE.

If the device processes a write command that specifies a write pointer zone that results in the additional sense code being set to (see ACS-5 and SPC-5):
a) WRITE ERROR - RECOVERY NEEDED;
b) WRITE ERROR - RECOVERY SCAN NEEDED; or
c) WRITE ERROR - INSUFFICIENT ZONE RESOURCES,

then the device shall set the LBA field in the error outputs to the lowest numbered LBA where a media failure has occurred during processing of that write command.

If the additional sense code is set to WRITE ERROR - RECOVERY SCAN NEEDED, the host should:
a) read all the logical blocks between the LBA indicated by the LBA field in the error outputs and the LBA indicated by the write pointer minus one; and
b) take recovery actions for the LBAs, if any, that return errors.

10.21.5.4 Interactions with Volatile Caches

While processing write commands there is a period of time during which the user data may be lost as a result of using volatile write cache (see ACS-5) if:

a) an unexpected power removal occurs (see Section 10.21.5.2); or
b) a hardware failure occurs.

If an error occurs while the device is writing to the medium in a Sequential Write Required zone (see Section 10.21.4.3.1.3) and that error is reported as a deferred error (see ACS-5), then the device may invalidate cached user data for LBAs in that zone that are greater than the LBA reported with the deferred error. This invalidation may occur for data cached in both volatile and non-volatile caches.

The host may affect behavior of the volatile write cache with:

a) the CLOSE ZONE command (see Section 12.2);
b) the FINISH ZONE command (see Section 12.8);
c) read FUA commands;
d) write FUA commands; and
e) flush commands.

If all write cache is non-volatile (i.e., the NON-VOLATILE WRITE CACHE bit (see ACS-5) is set to one), then all zone resources shall be persistent zone resources.

If volatile write cache is disabled (i.e., the VOLATILE WRITE CACHE ENABLED bit (see ACS-5) is cleared to zero), then all zone resources shall be persistent zone resources.

If volatile write cache is enabled (i.e., the VOLATILE WRITE CACHE ENABLED bit is set to one) and the device processes:

a) a CLOSE ZONE EXT command with the CLOSE ALL bit set to one (see Section 12.2.1);
b) a FINISH ZONE EXT command with the FINISH ALL bit set to one (see Section 12.8.1);
c) a RESET WRITE POINTER EXT command with the RESET ALL bit set to one (see Section 12.42.1) ;
d) a flush command; or
e) a STANDBY IMMEDIATE command (see ACS-5),

then, for all open write pointer zones, all zone resources shall become persistent zone resources before returning command completion without error.

If volatile write cache is enabled, then prior to a transition to a power condition that prevents access to the media (e.g., before a hard drive stops its spindle motor during a transition to the Standby_z power condition (see ACS-5)) for all open write pointer zones all zone resources shall become persistent zone resources.

If volatile write cache is enabled (i.e., the VOLATILE WRITE CACHE ENABLED bit is set to one) and the device processes:

a) a CLOSE ZONE EXT command with the CLOSE ALL bit cleared to zero (see Section 12.2.1);
b) a FINISH ZONE EXT command with the FINISH ALL bit cleared to zero (see Section 12.8.1);
c) a RESET WRITE POINTER EXT command with the RESET ALL bit cleared to zero (see Section 12.42.1);
d) a read FUA command;
e) a write FUA command; or
f) a write stream command with the FLUSH bit set to one (see ACS-5),

then, for the affected open write pointer zones, all zone resources shall become persistent zone resources before returning command completion without error.

If:

a) the write-read-verify feature set (see ACS-5) is enabled; and
b) the processing of a write command requires the device to read from the media before returning command completion without error,

then, for the affected open write pointer zones, all zone resources shall become persistent zone resources before returning command completion without error for that write command.

If volatile write cache is enabled and the device returns command completion without error for an IDLE IMMEDIATE command (see ACS-5), then all open zone resources that are volatile may remain volatile.

10.21.5.5 Interactions with the Sanitize Device Feature Set

If a device that supports the Host Managed Zones feature set also supports the Sanitize Device feature set (see ACS-5), then the additional requirements described in this subclause apply.

After completion of a sanitize operation without error:
a) zones that were active zones before the sanitize operation started shall be active; and
b) zones that were inactive zones before the sanitize operation started shall be inactive.

The ZONED NO RESET bit shall be supported as described in ACS-5 for each of the following commands that are supported:
a) the CRYPTO SCRAMBLE EXT command (see ACS-5);
b) the BLOCK ERASE EXT (see ACS-5) command; and
c) the OVERWRITE EXT command (see ACS-5).

A CRYPTO SCRAMBLE EXT command, BLOCK ERASE EXT command, or OVERWRITE EXT command affects all zones as follows:
a) the specified sanitize operation is performed as specified in ACS-5 for each Conventional zone (see Section 10.21.4.2);
b) the specified sanitize operation is performed as specified in ACS-5 for each write pointer zone (see Section 10.21.4.3) and shall include processing of the ZONED NO RESET bit as described in ACS-5 if a sanitize operation:
   A) is successful; or
   B) fails and:
      i. the Failure Mode Policy value (see ACS-5) allows successful processing of a SANITIZE STATUS EXT command with the CLEAR SANITIZE OPERATION FAILED bit set to one; and
      ii. a failed sanitize operation is followed by a SANITIZE STATUS EXT command with the CLEAR SANITIZE OPERATION FAILED bit set to one;
c) if the Zone Condition is READ ONLY before the specified sanitize operation is performed, then the Zone Condition shall not change to any value except OFFLINE as a result of an error in the specified sanitize operation; and
d) if the specified sanitize operation completed without error, then the zone's state shall be set as described in Section 4.8.3.5.1 with the following exceptions:
   A) the Zone Condition shall become OFFLINE for every write pointer zone that was not able to be sanitized (e.g., due to an inability to write to that zone); and
   B) for reasons outside the scope of this standard, the Zone Condition may become OFFLINE for a write

An OVERWRITE EXT command that completes without an error modifies the substitute data pattern.

10.21.5.6 Interactions with the Power Management Feature Set

As the result of a Power Management Transition PM3:PM2 (see ACS-5) the state of each write pointer zone will not be set as indicated for the initial state after a power-on reset (see Section 10.21.4.3.1).

10.21.5.7 Interactions with the SECURITY ERASE UNIT Command

If the device supports the Security Feature set and the device processes a SECURITY ERASE UNIT command (see ACS-5), then prior to returning command completion without error:

a) for all zones:
   A) if a zone has a Zone Condition of READ ONLY, then the device shall cause the Zone Condition to become OFFLINE; and
   B) if a zone has a Zone Condition that is not OFFLINE and not INACTIVE, then the device shall erase the data specified by the ERASE MODE bit (see ACS-5);
   and
b) for write pointer zones:

A) the device shall set Non-Sequential Write Resources Active to false; and
B) if:
   i. the zone has a Zone Condition that is not OFFLINE and not INACTIVE; and
   ii. the ZAC SECURITY OPTION bit (see ACS-5) is:
      A) cleared to zero, then the device shall cause the Zone Condition to become EMPTY; and
      B) set to one, then the device shall cause the Zone Condition to become FULL.

10.21.5.8 Interactions with the SEC4: Security Enabled/Locked/Not Frozen State

Except as described in this subclause, other interactions between the SEC4: Security Enabled/Locked/Not Frozen state are as described in ACS-5.

Processing of a ZONE ACTIVATE EXT command or a ZONE QUERY EXT command may result in an unmet prerequisite indicated by the SECURITY PREREQ bit (see Section 12.84.6.1) being set to one in the Zone Activation Results Header (see Section 12.84.6.1) with the effects described in Section 12.84.6.2.

10.21.5.9 Interactions with the SCT Write Same Command

10.21.5.9.1 Overview

If the FUNCTION CODE field is set to 0001h, 0002h, 0101h, or 0102h in an SCT Write Same command, then the ZAC OPTIONS field adds zoned device support capabilities to the processing of the command.
Unless otherwise specified, specifying a zoned device capability using the ZAC OPTIONS field shall not affect the processing of an SCT Write Same command as described in ACS-5.

Table 90 ZAC OPTIONS Field

Bit	Meaning
15	WRITE AND SET SUBSTITUTE DATA PATTERN bit (see Section 10.21.5.9.2)
14:4	Reserved
3:0	ZONE POST PROCESSING field (see Section 10.21.5.9.3)

If the FUNCTION CODE field is not set to 0001h, 0002h, 0101h, or 0102h and the ZAC OPTIONS field is not cleared to zero, then the device should:
a) complete the command with an error; or
b) process the command as if the ZAC OPTIONS field is cleared to zero.

10.21.5.9.2 WRITE AND SET SUBSTITUTE DATA PATTERN bit

A zoned device shall process an SCT Write Same command as follows:
1) perform the actions specified for the SCT Write Same command (see ACS-5);
2) if the WRITE AND SET SUBSTITUTE DATA PATTERN bit is set to one, set the substitute data pattern; and
3) process the ZONE POST PROCESSING field (see Section 10.21.5.9.3).

If an error occurs during any of these steps, the subsequent steps shall not be performed.

10.21.5.9.3 ZONE POST PROCESSING Field

After successfully processing the SCT Write Same command as described in ACS-5, the ZONE POST PROCESSING field specifies additional processing that shall be done by the device.

Table 91 ZONE POST PROCESSING field

Code	Meaning
0h	**None:** The device shall process the SCT Write Same command as described in ACS-5 with no additional processing
1h	**Close Affected Zones:** The device shall perform a Close Zone function for each zone to which user data was written during the processing of the SCT Write Same command.
2h	**Reset Affected Zones:** The device shall process a Reset Write Pointer function (see Section 10.21.4.3.8) for each zone to which user data was written during the processing of the SCT Write Same command.
3h to 8h	**Reserved**
9h	**Close All Zones:** The device shall process a Close Zone function (see Section 10.21.4.3.6) for each zone with a Zone Condition of IMPLICITLY OPENED or EXPLICITLY OPENED.
Ah	**Reset All Zones:** The device shall process a Reset Write Pointer function (see Section 10.21.4.3.8) for each zone with a Zone Condition of IMPLICITLY OPENED, EXPLICITLY OPENED, CLOSED, or FULL.
Bh..Fh	**Reserved**

10.21.5.9.4 Interactions with the WRITE UNCORRECTABLE EXT Command

For a Sequential Write Required zone with URSWRZ set to one;
if:
a) a WRITE UNCORRECTABLE EXT command marks an LBA in that zone as uncorrectable; and
b) a Reset Write Pointer function has been performed in that zone,
then a read operation for an LBA that has not been written since the most recent time the Zone Condition was EMPTY shall return the substitute data pattern.

If the device processes a WRITE UNCORRECTABLE EXT command that affects a Sequential Write Required zone, then:

a. the device shall cause logical blocks to become pseudo uncorrectable or flagged uncorrectable as described in ACS-5;
b. for each logical block that becomes a flagged uncorrectable logical block, the device shall cause all logical blocks in the affected physical block to become flagged uncorrectable logical blocks;
c. the device shall modify the write pointer to be one greater than the LBA of the highest numbered logical block that was marked uncorrectable, if the highest numbered logical block that was marked as uncorrectable is not the highest numbered logical block in that zone;
and
d. the device shall cause the Zone Condition to become FULL, if the highest numbered logical block that was marked as uncorrectable is the highest numbered logical block in that zone;
and

EXAMPLE - For a Sequential Write Required zone with 8 logical blocks per physical block and the first LBA in a physical block is LBA 8, a WRITE UNCORRECTABLE EXT command with LBA 8 results in LBAs 8 through 15 being marked as uncorrectable and the write pointer is set to LBA 16.

10.21.5.9.5 Interactions with the SET SECTOR CONFIGURATION EXT Command

Prior to returning command completion without error, the device shall transition all zones with a Zone Condition of READ ONLY zones to a Zone Condition of OFFLINE.

Upon the completion without error of a SET SECTOR CONFIGURATION EXT command:

a) a Reset Write Pointer function (see Section 10.21.4.3.8) may be performed on any write pointer zone affected by that command; and
b) the data returned by the following commands may differ from data returned from the same command prior to completion of that command the REPORT ZONES EXT command (see Section 12.40).

10.21.5.9.6 Interactions with the Storage Element Depopulation Feature Set

If the Host Managed Zone feature set is supported, then after completion of a depopulation operation without error or a depopulation restoration operation without error, the data returned by the REPORT ZONES EXT command may differ from data returned from the same command prior to command completion of that operation.

10.22 Storage Element Depopulation Feature Set

10.22.1 Overview

The Storage Element Depopulation feature set provides a mechanism for a host to depopulate a storage element from a device (i.e., make a specified storage element inaccessible for user data).
The media in a device may consist of a number of storage elements. Each of these storage elements:

a) is associated with some number of physical sectors; and
b) has a health status (see Section 12.12).

A storage element is a type of physical element. Physical elements are associated with a unique element identifier that is assigned by the device. The element identifier shall be non-zero. The association of element identifiers to physical elements shall persist across all resets. Activating microcode may change the association between element identifiers and physical elements.

The health status of a given element may become degraded (i.e., outside manufacturer's specification limit). Such degradation may affect the overall performance of the device as seen by the host.

10.22.2 Status Change Notification

The device may monitor the status of storage elements as a background operation. The device may notify the host that the status of one or more storage elements is not within manufacturer's specification limit (see Section 12.12.6.5.5). The device notifies the host of the change in status of a storage element by incrementing the value in the PHYSICAL ELEMENT STATUS CHANGED field (see Section 12.25.3.4).

To determine the status of storage elements, the host requests physical element status (see Section 12.12).

10.22.3 Repurposing Depopulation

10.22.3.1 Overview

Repurposing depopulation uses the REMOVE ELEMENT AND TRUNCATE command to perform the actions specified in Section 10.22.3.3 to reduce the capacity of the device.

Upon completion of the REMOVE ELEMENT AND TRUNCATE command, the actions performed by repurposing depopulation may continue as background processes. Upon the completion of the actions performed by repurposing depopulation, the contents of the user data area may have no relation to the contents of the user data area before the processing of the REMOVE ELEMENT AND TRUNCATE command. If any of the actions performed by repurposing depopulation fails, then the device may abort subsequent media access commands with additional sense code set to DEPOPULATION FAILED.

A REMOVE ELEMENT AND TRUNCATE command may be issued for each storage element that is to be removed from the current operating configuration. The effect of processing multiple REMOVE ELEMENT AND TRUNCATE commands shall be cumulative.

A device may have a limit on the number of storage elements that may be depopulated. If the device is requested to depopulate a storage element in excess of this limit, the device may return command aborted with the additional sense code set to INVALID FIELD IN CDB.

The capacity values are reported by the IDENTIFY DEVICE command and the IDENTIFY DEVICE data log.

10.22.3.2 Actions Performed by Repurposing Depopulation

Repurposing depopulation uses the REMOVE ELEMENT AND TRUNCATE command, which specifies that the device:

a) shall perform a depopulation operation;
b) shall perform a truncate operation; and
c) may perform an initialization.

10.22.3.3 Depopulation Operations

To initiate a depopulation operation the host issues a REMOVE ELEMENT AND TRUNCATE command. The depopulation operation may continue after the command that initiated the depopulation operation returns command completion without error.

A depopulation operation, a truncate operation, or a user data initialization operation shall not be terminated by a COMRESET, hardware reset, or software reset.

If a depopulation operation, a truncate operation, or a user data initialization operation:
a) detects an error that prevents successful completion of that operation; or
b) is interrupted by a power-on reset,

then the device:
a) shall terminate that operation; and
b) may abort subsequent media access commands with the additional sense code set to DEPOPULATION FAILED until a subsequent REMOVE ELEMENT AND TRUNCATE command or a RESTORE ELEMENTS AND REBUILD command completes without error.

Sector reallocation may occur during depopulation operations.

10.22.3.4 Truncate Operations

The REQUESTED MAX LBA field in the REMOVE ELEMENT AND TRUNCATE command (see Section 12.39.3.2):
a) specifies the native max address and the accessible max address and
b) should be no larger than the native max address at the time of command acceptance minus the ASSOCIATED CAPACITY field for the storage element being depopulated.

The processing of a REMOVE ELEMENT AND TRUNCATE command shall not change the LOGICAL SECTOR SIZE field or the LOGICAL SECTOR OFFSET field (see Section 12.25.17.3).

10.22.3.5 Command Processing During Depopulation Operations

While the device is performing the actions specified in Section 10.22.3.2 as a result of repurposing depopulation, the device shall abort all commands other than the:
a) IDENTIFY DEVICE;
b) IDLE IMMEDIATE with the Unload feature;
c) READ LOG EXT or READ LOG DMA EXT, if one of the following log addresses is requested:
    A) 04h (i.e., Device Statistics log);
    B) 10h (i.e., NCQ Command Error log);
    C) 30h (i.e., IDENTIFY DEVICE data log); or
    D) E0h (i.e., SCT Command/Status log);
d) REQUEST SENSE DATA EXT;
e) GET PHYSICAL ELEMENT STATUS;
f) SECURITY UNLOCK;
g) SET FEATURES PUIS feature set device spin-up;
h) SMART READ LOG, if one of the following log addresses is requested:
    A) 30h (i.e., IDENTIFY DEVICE data log); or
    B) E0h (i.e., SCT Command/Status log);
i) SMART RETURN STATUS, with the additional sense code set to DEPOPULATION IN PROGRESS.

10.22.4 Repurposing Depopulation Restoration

10.22.4.1 Overview

Repurposing depopulation restoration uses the RESTORE ELEMENTS AND REBULD command to restore some or all the capacity of the device that was reduced by previous depopulation operations.

Upon completion of the RESTORE ELEMENTS AND REBUILD command, the actions performed by depopulation revocation operations may continue as background processes. Upon the completion of the actions performed by depopulation revocation operations, the contents of the user data area may have no relation to the contents of the user data area before the processing of the RESTORE ELEMENTS AND REBUILD command.

10.22.4.2 Actions Performed by Repurposing Depopulation Restorations

Repurposing depopulation restorations use the RESTORE ELEMENTS AND REBUILD command, that specifies that, if depopulated storage elements are available for repurposing depopulation restoration, then the device:

a) shall perform a depopulation revocation operation;
b) shall perform a rebuild operation; and
c) may perform a user data initialization operation with inputs that do not change:
    A) the logical sector size; or
    B) logical to physical sector relationship;

A depopulation revocation operation, a rebuild operation, or a user data initialization operation shall not be terminated by a COMRESET, hardware reset, or software reset.

If a depopulation revocation operation, a rebuild operation, or a user data initialization operation:

a) detects an error that prevents successful completion of that operation; or
b) is interrupted by a power-on reset,

then the device:

a) shall terminate that operation; and
b) may abort subsequent media access commands with the additional sense code set to DEPOPULATION RESTORATION FAILED until a subsequent RESTORE ELEMENTS AND REBUILD command or a REMOVE ELEMENT AND TRUNCATE command completes without error.

10.22.4.3 Depopulation Revocation Operations

To initiate a depopulation revocation operation the host issues a RESTORE ELEMENTS AND REBUILD command.

The depopulation revocation operation may continue after the command that initiated the depopulation revocation operation returns command completion without error.

Sector reallocation may occur during depopulation revocation operations.

10.22.4.4 Rebuild Operations

A rebuild operation may change the native max address and the accessible max address.

After a rebuild operation completes all logical sectors on the device shall have the device logical block length and number of logical sectors per physical sector in effect at the time of the processing of the RESTORE ELEMENTS AND REBUILD command.

10.22.5 Interactions with Logs

While a device is performing a repurposing depopulation or a repurposing depopulation restoration, the device may change the following logs:

a) the Pending Defects log (see Section 12.25.6);

10.22.6 Interactions with Caches

Successful completion of the REMOVE ELEMENT AND TRUNCATE command or a RESTORE ELEMENTS AND REBUILD command shall invalidate all cached user data .

11 Command Protocol

The commands are grouped into different classes according to the protocols followed for command execution. The command classes with their associated protocols are defined below.
Please refer to Serial ATA Revision 3.5 about each protocol.
For all commands, the host must first check if BSY=1, and should proceed no further unless and until BSY=0. For all commands, the host must also wait for RDY=1 before proceeding.
A device must maintain either BSY=1 or DRQ=1 at all times until the command is completed. The INTRQ signal is used by the device to signal most, but not all, times when the BSY bit is changed from 1 to 0 during command execution.
A command shall only be interrupted with a COMRESET or software reset. The result of writing to the Command register while BSY=1 or DRQ=1 is unpredictable and may result in data corruption. A command should only be interrupted by a reset at times when the host thinks there may be a problem, such as a device that is no longer responding.
Interrupts are cleared when the host reads the Status Register, issues a reset, or writes to the Command Register.

11.1 PIO Data In Commands

These commands are:

- Device Configuration Identify
- Identify Device
- Read Buffer
- Read Log Ext
- Read Multiple
- Read Multiple Ext
- Read Sector(s)
- Read Sector(s) Ext
- Read Stream Ext
- SMART Read Attribute Values
- SMART Read Attribute Thresholds
- SMART Read Log
- Trusted Receive

Execution includes the transfer of one or more 512 byte sectors of data from the device to the host.

11.2 PIO Data Out Commands

These commands are:

- Device Configuration Set
- Download Microcode
- Security Disable Password
- Security Erase Unit
- Security Set Password
- Security Unlock
- Set Max Set Password
- Set Max Unlock
- SMART Write Log
- Trusted Send
- Write Buffer
- Write Log Ext
- Write Multiple
- Write Multiple Ext
- Write Multiple FUA Ext
- Write Sector(s)
- Write Sector(s) Ext
- Write Stream Ext

Execution includes the transfer of one or more 512 byte sectors of data from the host to the device.

11.3 Non-Data commands

These commands are:

- Check Power Mode
- Close Zone Ext
- Device Configuration Freeze Lock
- Device Configuration Restore
- Execute Device Diagnostic
- Finish Zone Ext
- Flush Cache
- Flush Cache Ext
- Format Unit
- Idle
- Idle Immediate
- Initialize Device Parameters
- NCQ Non-Data
- NOP
- Open Zone Ext
- Overwrite Ext
- Read Native Max Address
- Read Native Max Address Ext
- Read Verify Sector(s)
- Read Verify Sector(s) Ext
- Recalibrate
- Remove Element and Truncate
- Request Sense Data Ext
- Reset Write Pointer Ext
- Restore Elements and Rebuild
- Sanitize Crypto Scramble Ext (data encryption model only)
- Sanitize Freeze Lock Ext
- Sanitize Overwrite Ext
- Sanitize Status Ext
- Security Erase Prepare
- Security Freeze Lock
- Seek
- Sense Condition
- Set Date & Time Ext
- Set Features
- Set Max Address
- Set Max Address Ext
- Set Max Freeze Lock
- Set Max Lock
- Set Multiple Mode
- Set Sector Configuration Ext
- Sleep
- SMART Disable Operations

- SMART Enable/Disable Attribute Autosave
- SMART Enable/Disable Automatic Off-Line
- SMART Enable Operations
- SMART Execute Off-line Data Collection
- SMART Return Status
- SMART Save Attribute Values
- Standby
- Standby Immediate
- Write Uncorrectable Ext

Execution of these commands involves no data transfer.

11.4 DMA Data In Commands and DMA Data Out Commands

These commands are:

- Download Microcode DMA
- Get Physical Element Status
- Read Buffer DMA
- Read DMA
- Read DMA Ext
- Read Log DMA Ext
- Report Zones Ext
- Trusted Receive DMA
- Trusted Send DMA
- Write Buffer DMA
- Write DMA
- Write DMA Ext
- Write DMA FUA Ext
- Write Log DMA Ext
- Zone Activate Ext
- Zone Query Ext

Execution of this class of command includes the transfer of one or more blocks of data between the device and the host using DMA transfer.

11.5 First-party DMA commands

These commands are:

- Read FPDMA Queued
- Receive FPDMA Queued
- Send FPDMA Queued
- Write FPDMA Queued

Execution of this class of commands includes command queuing and the transfer of one or more blocks of data between the device and the host. The protocol is described in the Section 13.6 “Native Command Queuing” of “Serial ATA Revision 3.5”.
Host knowledge of I/O priority may be transmitted to the device as part of the command. There are two priority classes for NCQ command as high priority, the host is requesting a better quality of service for that command than the commands issued with normal priority.
The classes are forms of soft priority. The device may choose to complete a normal priority command before an outstanding high priority command, although preference is given to the high priority commands. The priority class is indicated in bit 7 (Priority Information) in the Sector Count register for NCQ commands (READ FPDMA QUEUED and WRITE FPDMA QUEUED). This bit can indicate either the normal priority or high priority class. If a command is marked by the host as high priority, the device attempts to provide better quality of service for the command. The device may not process all high priority requests before satisfying normal priority requests.

12 Command Descriptions

Table 92 Command Set

Protocol	Command	Code (Hex)	Binary Code Bit							
			7	6	5	4	3	2	1	0
3	Check Power Mode	E5	1	1	1	0	0	1	0	1
3	Check Power Mode*	98	1	0	0	1	1	0	0	0
3	Close Zone Ext	9F	1	0	0	1	1	1	1	1
3	Crypto Scramble Ext (data encryption model only)	B4	1	0	1	1	0	1	0	0
3	Device Configuration Restore	B1	1	0	1	1	0	0	0	1
3	Device Configuration Freeze Lock	B1	1	0	1	1	0	0	0	1
1	Device Configuration Identify	B1	1	0	1	1	0	0	0	1
2	Device Configuration Set	B1	1	0	1	1	0	0	0	1
2	Download Microcode	92	1	0	0	1	0	0	1	0
4	Download Microcode DMA	93	1	0	0	1	0	0	1	1
3	Execute Device Diagnostic	90	1	0	0	1	0	0	0	0
3	Finish Zone Ext	9F	1	0	0	1	1	1	1	1
3	Flush Cache	E7	1	1	1	0	0	1	1	1
3	Flush Cache Ext	EA	1	1	1	0	1	0	1	0
3	Format Unit	F7	1	1	1	1	0	1	1	1
4	Get Physical Element Status	12	0	0	0	1	0	0	1	0
1	Identify Device	EC	1	1	1	0	1	1	0	0
3	Idle	E3	1	1	1	0	0	0	1	1
3	Idle*	97	1	0	0	1	0	1	1	1
3	Idle Immediate	E1	1	1	1	0	0	0	0	1
3	Idle Immediate*	95	1	0	0	1	0	1	0	1
3	Initialize Device Parameters	91	1	0	0	1	0	0	0	1
3	NCQ Non-Data	63	0	1	1	0	0	0	1	1
3	Open Zone Ext	9F	1	0	0	1	1	1	1	1
3	Overwrite Ext	B4	1	0	1	1	0	1	0	0
1	Read Buffer	E4	1	1	1	0	0	1	0	0
4	Read Buffer DMA	E9	1	1	1	0	1	0	0	1
4	Read DMA	C8	1	1	0	0	1	0	0	0
4	Read DMA	C9	1	1	0	0	1	0	0	1
4	Read DMA Ext	25	0	0	1	0	0	1	0	1
5	Read FPDMA Queued	60	0	1	1	0	0	0	0	0
1	Read Log Ext	2F	0	0	1	0	1	1	1	1
4	Read Log DMA Ext	47	0	1	0	0	0	1	1	1
1	Read Multiple	C4	1	1	0	0	0	1	0	0
1	Read Multiple Ext	29	0	0	1	0	1	0	0	1
3	Read Native Max Address	F8	1	1	1	1	1	0	0	0
3	Read Native Max Address Ext	27	0	0	1	0	0	1	1	1
1	Read Sector(s)	20	0	0	1	0	0	0	0	0
1	Read Sector(s)	21	0	0	1	0	0	0	0	1
1	Read Sector(s) Ext	24	0	0	1	0	0	1	0	0
3	Read Verify Sector(s)	40	0	1	0	0	0	0	0	0
3	Read Verify Sector(s)	41	0	1	0	0	0	0	0	1
3	Read Verify Sector(s) Ext	42	0	1	0	0	0	0	1	0

Protocol	Command	Code (Hex)	Binary Code Bit							
			7	6	5	4	3	2	1	0
3	Recalibrate	1x	0	0	0	1	-	-	-	-
5	Receive FPMDA Queued	65	0	1	1	0	0	1	0	1
3	Remove Element and Truncate	7C	0	1	1	1	1	1	0	0
4	Report Zones Ext	4A	0	1	0	0	1	0	1	0
3	Request Sense Data Ext	0B	0	0	0	0	1	0	1	1
3	Reset Write Pointer Ext	9F	1	0	0	1	1	1	1	1
3	Restore Elements and Rebuild	7D	0	1	1	1	1	1	0	1
3	Sanitize Freeze Lock Ext	B4	1	0	1	1	0	1	0	0
3	Sanitize Status Ext	B4	1	0	1	1	0	1	0	0
2	Security Disable Password	F6	1	1	1	1	1	0	1	0
3	Security Erase Prepare	F3	1	1	1	1	0	0	1	1
2	Security Erase Unit	F4	1	1	1	1	0	1	0	0
3	Security Freeze Lock	F5	1	1	1	1	0	1	0	1
2	Security Set Password	F1	1	1	1	1	0	0	0	1
2	Security Unlock	F2	1	1	1	1	0	0	1	0
3	Seek	7x	0	1	1	1	-	-	-	-
5	Send FPDMA Queued	64	0	1	1	0	0	1	0	0
3	Set Date & Time Ext	77	0	1	1	1	0	1	1	1
3	Set Features	EF	1	1	1	0	1	1	1	1
3	Set Max Address	F9	1	1	1	1	1	0	0	1
3	Set Max Address Ext	37	0	0	1	1	0	1	1	1
3	Set Multiple Mode	C6	1	1	0	0	0	1	1	0
3	Set Sector Configuration Ext	B2	1	0	1	1	0	0	1	0
3	Sleep	E6	1	1	1	0	0	1	1	0
3	Sleep*	99	1	0	0	1	1	0	0	1
3	SMART Disable Operations	B0	1	0	1	1	0	0	0	0
3	SMART Enable/Disable Attribute Autosave	B0	1	0	1	1	0	0	0	0
3	SMART Enable Operations	B0	1	0	1	1	0	0	0	0
3	SMART Execute Off-line Data Collection	B0	1	0	1	1	0	0	0	0
1	SMART Read Attribute Values	B0	1	0	1	1	0	0	0	0
1	SMART Read Attribute Thresholds	B0	1	0	1	1	0	0	0	0
3	SMART Return Status	B0	1	0	1	1	0	0	0	0
3	SMART Save Attribute Values	B0	1	0	1	1	0	0	0	0
2	SMART Write Log	B0	1	0	1	1	0	0	0	0
3	SMART Enable/Disable Automatic Off-line	B0	1	0	1	1	0	0	0	0
3	Standby	E2	1	1	1	0	0	0	1	0
3	Standby*	96	1	0	0	1	0	1	1	0
3	Standby Immediate	E0	1	1	1	0	0	0	0	0
3	Standby Immediate*	94	1	0	0	1	0	1	0	0
1	Trusted Receive	5C	0	1	0	1	1	1	0	0
4	Trusted Receive DMA	5D	0	1	0	1	1	1	0	1
2	Trusted Send	5E	0	1	0	1	1	1	1	0
4	Trusted Send DMA	5F	0	1	0	1	1	1	1	1
2	Write Buffer	E8	1	1	1	0	1	0	0	0
4	Write Buffer DMA	EB	1	1	1	0	1	0	1	1
4	Write DMA	CA	1	1	0	0	1	0	1	0
4	Write DMA	CB	1	1	0	0	1	0	1	1
4	Write DMA Ext	35	0	0	1	1	0	1	0	1

Protocol	Command	Code (Hex)	Binary Code Bit							
			7	6	5	4	3	2	1	0
4	Write DMA FUA Ext	3D	0	0	1	1	1	1	0	1
5	Write FPDMA Queued	61	0	1	1	0	0	0	0	1
2	Write Log Ext	3F	0	0	1	1	1	1	1	1
4	Write Log DMA Ext	57	0	1	0	1	0	1	1	1
2	Write Multiple	C5	1	1	0	0	0	1	0	1
2	Write Multiple Ext	39	0	0	1	1	1	0	0	1
2	Write Multiple FUA Ext	CE	1	1	0	0	1	1	1	0
2	Write Sector(s)	30	0	0	1	1	0	0	0	0
2	Write Sector(s)	31	0	0	1	1	0	0	0	1
2	Write Sector(s) Ext	34	0	0	1	1	0	1	0	0
3	Write Uncorrectable Ext	45	0	1	0	0	0	1	0	1
4	Zone Activate Ext	9F	1	0	0	1	1	1	1	1
4	Zone Query Ext	9F	1	0	0	1	1	1	1	1

Protocol :
1 : PIO data IN command
2 : PIO data OUT command
3 : Non data command
4 : DMA command
5 : DMA Queued command
+ : Vendor specific command

Commands marked * are alternate command codes for previous defined commands.

Table 93 Command Set (Subcommand)

Command (Subcommand)	Command code (Hex)	Feature Register (Hex)
(Device Configuration Overlay)		
Device Configuration Restore	B1	C0
Device Configuration Freeze Lock	B1	C1
Device Configuration Identify	B1	C2
Device Configuration Set	B1	C3
(NCQ Non-data)		
Abort NCQ queue – Abort All	63	00
Abort NCQ queue – Abort Streaming	63	10
Abort NCQ queue – Abort Non-Streaming	63	20
Abort NCQ queue – Abort Selected	63	30
Deadline Handling – WDNC	63	Set:11 Clear:01
Deadline Handling – RDNC	63	Set:21 Clear:01
(Sanitize Device Feature Set)		
Sanitize Status Ext	B4	0000
Crypto Scramble Ext (data encryption model only)	B4	0011
Overwrite Ext	B4	0014
Sanitize Freeze Lock Ext	B4	0020
(Set Features)		
Enable Write Cache	EF	02
Set Transfer Mode	EF	03
Enable Advanced Power Management	EF	05
Enable Power-up in Standby Feature Set	EF	06
Power-up in Standby Feature Set Device Spin-up	EF	07
Disable read look-ahead feature	EF	55
Repurposing Depopulation (RDP) Feature Set	EF	5B
Write Cache Enabled Data Safety	EF	5C
Disable reverting to power on defaults	EF	66
Disable write cache	EF	82
Disable Advanced Power Management	EF	85
Disable Power-up in Standby Feature Set	EF	86
Enable read look-ahead feature	EF	AA
Enable reverting to power on defaults	EF	CC
(Set Max Address)		
Set Max Set Password	F9	01
Set Max Lock	F9	02
Set Max Unlock	F9	03
Set Max Freeze Lock	F9	04
(SMART Function)		
SMART Read Attribute Values	B0	D0
SMART Read Attribute Thresholds	B0	D1
SMART Enable/Disable Attribute Autosave	B0	D2
SMART Save Attribute Values	B0	D3
SMART Execute Off-line Data Collection	B0	D4
SMART Read Log	B0	D5
SMART Write Log	B0	D6
SMART Enable Operations	B0	D8
SMART Disable Operations	B0	D9
SMART Return Status	B0	DA
SMART Enable/Disable Automatic Off-line	B0	DB

Command (Subcommand)	Command code (Hex)	Feature Register (Hex)
(Zone Management Commands)		
Close Zone Ext	9F	0001 or 0101
Finish Zone Ext	9F	0002 or 0102
Open Zone Ext	9F	0003 or 0103
Report Zones Ext	4A	See Section 12.40
Reset Write Pointer Ext	9F	0004 or 0104
Zone Activate Ext	9F	See Section 12.84
Zone Query Ext	9F	See Section 12.85

Table 92 shows the commands that are supported by the device. Table 93 shows the sub-commands that are supported by each command or feature.

The following symbols are used in the command descriptions:

Output Registers

0 Indicates that the bit must be set to 0.

1 Indicates that the bit must be set to 1.

D The device number bit. Indicates that the device number bit of the Device/Head Register should be specified. This bit is reserved since all Serial ATA devices behave like Device 0.

H Head number. Indicates that the head number part of the Device/Head Register is an output parameter and should be specified.

L Indicates the addressing mode. = 1 device supports LBA addressing mode.

R Retry. Original meaning is already obsolete, there is no difference between 0 and 1. (Using 0 is recommended for future compatibility.)

B Option Bit. Indicates that the Option Bit of the Sector Count Register should be specified. (This bit is used by Set Max ADDRESS command)

V Valid. Indicates that the bit is part of an output parameter and should be specified.

X Indicates that the hex character is not used.

- Indicates that the bit is not used.

Input Registers

0 Indicates that the bit is always set to 0.

1 Indicates that the bit is always set to 1.

H Head number. Indicates that the head number part of the Device/Head Register is an input parameter and will be set by the device.

V Valid. Indicates that the bit is part of an input parameter and will be set to 0 or 1 by the device.

- Indicates that the bit is not part of an input parameter.

The command descriptions show the contents of the Status and Error Registers after the device has completed processing the command and has interrupted the host.

Please refer to ATA interface specifications about other commands' descriptions which are not described in this SATA interface specification. However, be careful that Serial ATA Device/Head register bit-4 (d) is different from that of Parallel ATA. In Serial ATA, Device/Head register bit-4 is reserved for all commands.

12.1 Check Power Mode (E5h/98h)

Table 94 Check Power Mode Command (E5h/98h)

Command Input

Field	Description
FEATURE	N/A
COUNT	N/A
LBA	N/A
DEVICE	**Bit** **Description** 7 Obsolete 6 N/A 5 Obsolete 4 Transport Dependent 3:0 Reserved
Command	7:0 E5h or 98h

Normal Outputs

Field	Description
ERROR	N/A
COUNT	**Value** **Description** 00h Device is in the: - PM2: Standby state and the EPC feature set is not enabled; or - PM2: Standby state, the EPC feature set is enabled, and the device is in the Standby_z power condition. 01h Device is in the: - PM2: Standby state, the EPC feature set is enabled, and the device is in the Standby_y power condition. 02h..3Fh Reserved 40h..41h Obsolete 42h..7Fh Reserved 80h Device is in the: - PM1: Idle state and EPC feature set is not supported; or - PM1: Idle state and EPC feature set is supported and the EPC feature set is disabled. 81h Device is in the: - PM1: Idle state, the EPC feature set is enabled, and the device is in the Idle_a power condition. 82h Device is in the: - PM1: Idle state, the EPC feature set is enabled, and the device is in the Idle_b power condition. 83h Device is in the: - PM1: Idle state, the EPC feature set is enabled, and the device is in the Idle_c power condition 84h..FEh Reserved FFh Device is in the: - PM0: Active state or - PM1: Idle state.
LBA	If the LOW POWER STANDBY SUPPORTED bit is set to one, then this field is as described in this table. Otherwise, this field is N/A. **Bit** **Description** 27:20 Device is waiting to enter a lower power condition:

	Value **Description** 00h Standby_z 01h Standby_y 02h..80h Reserved 81h Idle_a 82h Idle_b 83h Idle_c 84h..FEh Reserved FFh Device is not waiting to enter a lower power condition 19 Device is held in the current power condition 18:0 Reserved
DEVICE	**Bit** **Description** 7 Obsolete 6 N/A 5 Obsolete 4 Transport Dependent 3:0 Reserved
STATUS	**Bit** **Description** 7:6 Transport Dependent 5 DEVICE FAULT bit 4 N/A 3 Transport Dependent 2 N/A 1 SENSE DATA AVAILABLE bit 0 ERROR bit

Error Outputs

Field	**Description**
ERROR	**Bit** **Description** 7:3 N/A 2 ABORT bit 1:0 N/A
COUNT	N/A
LBA	N/A
DEVICE	**Bit** **Description** 7 Obsolete 6 N/A 5 Obsolete 4 Transport Dependent 3:0 Reserved
STATUS	**Bit** **Description** 7:6 Transport Dependent 5 DEVICE FAULT bit 4:2 N/A 1 SENSE DATA AVAILABLE bit 0 ERROR bit

The Check Power Mode Command will report the current power mode of the device. This includes whether the device is spun up and the media is available for immediate access. This command will not cause the device to change its power management state.

12.2 Close Zone Ext (9Fh/01h)

Table 95 Close Zone Ext Command (9Fh/01h)

Command Input

Field	Description
FEATURE	**Bit** **Description** 15:9 Reserved 8 ALL bit – See Section 5.2.4.3.2 7:5 Reserved 4:0 ZM_ACTION field, shall be set to 01h
COUNT	ZONE COUNT field
LBA	ZONE ID field
DEVICE	**Bit** **Description** 7 Obsolete 6 Shall be set to one 5 Obsolete 4 Transport Dependent – See ACS-5 3:0 Reserved
Command	7:0 9Fh

The Close Zone Ext command requests that one or more Close Zone functions be performed.
The Close Zone Ext command is based on the Non-Data ZAC Management Out command template and is able to use the template's NCQ encapsulation capability.

12.2.1 ALL bit

If the ALL bit is:

a) cleared to zero, then a zone range is specified using other command inputs; and
b) set to one, with the ZONE COUNT field:
    a. not cleared to zero, then the device shall return command completion with an error, with the additional sense code set to INVALID FIELD IN CDB (see ACS-5); and
    b. cleared to zero, then:
        i. the ZONE ID field is ignored; and
        ii. all zones on the device are specified as the command inputs.

12.2.2 ZONE COUNT field

The ZONE COUNT field specifies the number of logically contiguous zones that the device is requested to process, starting with the zone specified by the ZONE ID field.
A ZONE COUNT field cleared to zero or set to one specifies a zone range that contains only one zone.

12.2.3 ZONE ID field

The ZONE ID field specifies the lowest LBA of the write pointer zone for which the device is requested to process the command specified by the ZM_ACTION field and the COMMAND field.

If the ZONE ID field does not specify the lowest LBA of the write pointer zone, the device shall return command aborted with the additional sense code to INVALID FIELD IN CDB (see ACS-5).

If the ZONE ID field specifies a value greater than the maximum zoned address then the device shall return command aborted with the additional sense code set to LOGICAL BLOCK ADDRESS OUT OF RANGE (see ACS-5).

12.2.4 Close Zone Ext command processing

If the device has not returned command completion with an error for the Close Zone Ext command, then the device processes the command as shown in Table 96.

Table 96 Close Zone Ext command processing

ALL bit	ZONE COUNT field	Description
zero	zero or more	If the specified zone has a Zone Condition of: a) IMPLICITLY OPENED or EXPLICITLY OPENED, then the device shall perform a Close Zone function on the specified zone and b) EMPTY, CLOSED, or FULL, then the device shall make no changes in the Zone Condition and shall return command completion without error.
	two or more	For each zone in the specified zone range that has a Zone Condition of IMPLICITLY OPENED or EXPLICITLY OPENED, the device server shall perform a Close Zone function.
one	zero	For each zone on the device that has a Zone Condition of IMPLICITLY OPENED or EXPLICITLY OPENED, the device server shall perform a Close Zone function.
	non-zero	See Section 12.2.1

Normal Outputs

See Normal Outputs in Section 12.9 Flush Cache (E7h)

Error Outputs

See Error Outputs in Section 12.5 Download Microcode (92h)

12.3 Configure Stream (51h)

Table 97 Configure Stream Command (51h)

Command Input

Field	Description
FEATURE	**Bit** **Description** 15:8 DEFAULT CCTL field 7 ADD/REMOVE STREAM bit 6 Obsolete 5:3 Reserved 2:0 STREAM ID field
COUNT	Allocation Unit
LBA	N/A
DEVICE	**Bit** **Description** 7:5 Reserved 4 Transport Dependent 3:0 Reserved
Command	7:0 51h

The Configure Stream command specifies the operating parameters of an individual stream. A Configure Stream command may be issued for each stream that is to be added or removed from the current operating configuration. If A/R = 1 and the specified ID is already valid at the device, the new parameters shall replace the old parameters, unless Command Abort is returned (see abort conditions for Error Register). In this case the old parameters for the specified Stream ID shall remain in effect.

Abort conditions for Error register are the following:

- The device does not support the Streaming Feature Set.
- A/R is cleared to zero and the Feature field contains a Stream ID that has not been sent in a previous CONFIGURE STREAM command.

Output Parameters To The Device

Feature Current bit 7 (A/R)	If set to one, a request to add a new stream. If cleared to zero, a request to remove a previous configured stream is specified.
Feature Current bit 6 (R/W)	R/W specifies a read stream if cleared to zero and a write stream if set to one.
Feature Current bit 0..2 (Stream ID)	The Stream ID shall be a value between 0 and 7.
Feature Previous	The default Command Completion Time Limit (CCTL). The value is calculated as follows: (Default CCTL) = ((content of the Features register)* (Identify Device words (99:98))) microseconds. This time shall be used by the device when a streaming command with the same stream ID and a CCTL of zero are issued. The time is measured from the write of the command register to the final INTRQ for command completion. The device has minimum CCTL value. When the specified value is shorter than the minimum value, CCTL is set to the minimum value. Actual minimum CCTL value is described in the “Deviations from Standard” section.
Sector Count Current	Allocation Unit Size In Sectors (7:0)
Sector Count Previous	Allocation Unit Size In Sectors (15:8)

12.4 Device Configuration Overlay (B1h)

Table 98 Device Configuration Overlay Command (B1h)

Command Block Output Registers								
Register	7	6	5	4	3	2	1	0
Data	-	-	-	-	-	-	-	-
Feature	1	0	1	0	V	V	V	V
Sector Count	-	-	-	-	-	-	-	-
Sector Number	-	-	-	-	-	-	-	-
Cylinder Low	-	-	-	-	-	-	-	-
Cylinder High	-	-	-	-	-	-	-	-
Device/Head	-	-	-	D	-	-	-	-
Command	1	0	1	1	0	0	0	1

Command Block Input Registers								
Register	7	6	5	4	3	2	1	0
Data	-	-	-	-	-	-	-	-
Error	…See Below…							
Sector Count	V	V	V	V	V	V	V	V
Sector Number	-	-	-	-	-	-	-	-
Cylinder Low	V	V	V	V	V	V	V	V
Cylinder High	V	V	V	V	V	V	V	V
Device/Head	-	-	-	-	-	-	-	-
Status	…See Below…							

Error Register							
7	6	5	4	3	2	1	0
CRC	UNC	0	IDN	0	ABT	T0N	AMN
0	0	0	0	0	V	0	0

Status Register							
7	6	5	4	3	2	1	0
BSY	RDY	DF	DSC	DRQ	COR	IDX	ERR
V	V	0	-	V	-	-	V

Individual Device Configuration Overlay feature set commands are identified by the value placed in the Features register. The table below shows these Features register values.

Table 99 Device Configuration Overlay Features register values

Value	Command
C0h	DEVICE CONFIGURATION RESTORE
C1h	DEVICE CONFIGURATION FREEZE LOCK
C2h	DEVICE CONFIGURATION IDENTIFY
C3h	DEVICE CONFIGURATION SET
other	Reserved

12.4.1 Device Configuration Restore (Subcommand C0h)

The Device Configuration Restore command disables any setting previously made by a Device Configuration Set command and returns the content of the Identify Device or Identify Packet Device command response to the original settings as indicated by the data returned from the execution of a Device Configuration Identify command.

12.4.2 Device Configuration Freeze Lock (Subcommand C1h)

The Device Configuration Freeze Lock command prevents accidental modification of the Device Configuration Overlay settings. After successful execution of a Device Configuration Freeze Lock command, all Device Configuration Set, Device Configuration Freeze Lock, Device Configuration Identify, and Device Configuration Restore commands are aborted by the device. The Device Configuration Freeze Lock condition shall be cleared by a power-down. The Device Configuration Freeze Lock condition shall not be cleared by hardware or software reset.

12.4.3 Device Configuration Identify (Subcommand C2h)

The Device Configuration Identify command returns a 512 byte data structure via PIO data-in transfer. The content of this data structure indicates the selectable commands, modes, and feature sets that the device is capable of supporting. If a Device Configuration Set command has been issued reducing the capabilities, the response to an Identify Device or Identify Packet Device command will reflect the reduced set of capabilities, while the Device Configuration Identify command will reflect the entire set of selectable capabilities.

The format of the Device Configuration Overlay Data structure is shown in Table 100.

12.4.4 Device Configuration Set (Subcommand C3h)

The Device Configuration Set command allows a device manufacturer or a personal computer system manufacturer to reduce the set of optional commands, modes, or feature sets supported by a device as indicated by a Device Configuration Identify command. The Device Configuration Set command transfers an overlay that modifies some of the bits set in words 63, 82, 83, 84, and 88 of the Identify Device command response. When the bits in these words are cleared, the device no longer supports the indicated command, mode, or feature set. If a bit is set in the overlay transmitted by the device that is not set in the overlay received from a Device Configuration Identify command, no action is taken for that bit.

The format of the overlay transmitted by the device is described in the table on next page. The restrictions on changing these bits are described in the text following that table. If any of the bit modification restrictions described is violated or any setting is changed with Device Configuration Set command, the device shall return command aborted. At that case, error reason code is returned to sector count register, invalid word location is returned to cylinder high register, and invalid bit location is returned to cylinder low register. The definition of error information is shown in Table 101.

Error Information Example 1:

After establishing a protected area with Set Max address, if a user attempts to change maximum LBA address (Device Configuration Set or Device Configuration Restore), device shall abort that command and return error reason code as below.

Cylinder high	:	03h	= Word 3 is invalid
Cylinder low	:	00h	this register is not assigned in this case
Sector Number	:	00h	this register is not assigned in this case
Sector count	:	06h	= Protected area is now established

Error Information Example 2:

When device is enabled the Security feature set, if user attempts to disable that feature, device abort that command and return error reason code as below.

Cylinder high	:	07h	= Word 7 is invalid
Cylinder low	:	00h	= bit 8-15 are valid
Sector Number	:	08h	= bit 3 is invalid
Sector count	:	04h	= now Security feature set is enabled

Table 100 Device Configuration Overlay Data structure

Word	Content	
0	0002h	Data Structure revision
1	Multiword DMA modes supported	
	15-3	Reserved
	2	1 = Multiword DMA mode 2 and below are supported
	1	1 = Multiword DMA mode 1 and below are supported
	0	1 = Multiword DMA mode 0 is supported
2	Ultra DMA modes supported	
	15-7	Reserved
	6	1 = Ultra DMA mode 6 and below are supported
	5	1 = Ultra DMA mode 5 and below are supported
	4	1 = Ultra DMA mode 4 and below are supported
	3	1 = Ultra DMA mode 3 and below are supported
	2	1 = Ultra DMA mode 2 and below are supported
	1	1 = Ultra DMA mode 1 and below are supported
	0	1 = Ultra DMA mode 0 is supported
3-6	Maximum LBA address	
7	Command set/feature set supported	
	15	0 = Reserved
	14	0 = Write Read Verify is supported
	13	0 = Reserved
	12	1 = SMART Selective self-test is supported
	11	1 = Forced Unit Access is supported
	10	0 = Reserved
	9	1 = Streaming feature set is supported
	8	1 = 48-bit Addressing feature set supported
	7	1 = Host Protected Area feature set supported
	6	1 = Auto Acoustic Management is supported
	5	1 = Read/Write DMA Queued commands supported
	4	1 = Power-up in Standby feature set supported
	3	1 = Security feature set supported
	2	1 = SMART error log supported
	1	1 = SMART self-test supported
	0	1 = SMART feature set supported
8	Serial ATA command / feature sets supported	
	15-8	Reserved
	7	1 = Supports NCQ Send Receive Queued
	6	1 = Supports NCQ Non-Data
	5	1 = Supports Auto Partial to Slumber
	4	1 = Supports software settings preservation
	3	Reserved
	2	1 = Supports interface power management
	1	1 = Supports non-zero buffer offset in DMA Setup FIS
	0	1 = Supports native command queuing
9-20	Reserved	
21	15-14	Reserved
	13	1 = Support for WRITE UNCORRECTABLE is allowed
	12	Reserved
	11	1 = Support Free Fall
	10	1 = Support Data Set Management
	9	1 = Extended Power Conditions feature set supported
	8-0	Reserved
22-254	Reserved	
255	Integrity word <Note .>	
	15-8	Checksum
	7-0	Signature (A5h)

Notes:

If bit 6 of Word 8 is set to one and bit 0 of Word 8 is cleared to zero, then the device shall return command aborted.

Bits 7:0 of Word 255 contain the value A5h. Bits 15:8 of this word contain the data structure checksum. The data structure checksum is the two's complement of the sum of all byte in words 0 through 254 and the byte consisting of bits 7:0 of word 255. Each byte is added with unsigned arithmetic, and overflow is ignored. The sum of all bytes is zero when the checksum is correct.

Table 101 DCO error information definition

Cylinder high	invalid word location	
Cylinder low	invalid bit location (bits (15:8))	
Sector number	invalid bit location (bits (7:0))	
Sector count	error reason code & description	
	01h	DCO feature is frozen
	02h	Device is now Security Locked mode
	03h	Device's feature is already modified with DCO
	04h	User attempt to disable any feature enabled
	05h	Device is now SET MAX Locked or Frozen mode
	06h	Protected area is now established
	07h	DCO is not supported
	08h	Subcommand code is invalid
	FFh	other reason

12.5 Download Microcode (92h)

Table 102 Download Microcode Command (92h)

Command Input

Field	Description
FEATURE	SUBCOMMAND field
COUNT	BLOCK COUNT field (7:0)
LBA	**Bit** **Description** 27:24 Reserved 23:8 BUFFER OFFSET field 7:0 BLOCK COUNT field (15:8)
DEVICE	**Bit** **Description** 7:5 Obsolete 4 Transport Dependent 3:0 Reserved
Command	7:0 92h

Normal Outputs

Field	Description
FEATURE	Subcommand code. 03h : Download with offsets and save microcode. (See Section 12.5.3) 07h : Download and save microcode. 0Eh : Download with offsets and save microcode for future use. (See Section 12.5.4) 0Fh : Activate downloaded microcode. (See Section 12.5.5) Other values are reserved.
COUNT	Lower byte of 16-bit sector count value to transfer from the host. (See Section 12.5.2)
NUMBER	Higher byte of 16-bit sector count value to transfer from the host. (See Section 12.5.2)
CYLINDER	Buffer offset (only used for Feature = 03h or 0Eh)

Error Outputs

Field	Description
ERROR	**Bit** **Description** 7 INTERFACE CRC bit 6:3 N/A 2 ABORT bit 1:0 N/A
COUNT	N/A
LBA	N/A
DEVICE	**Bit** **Description** 7 Obsolete 6 N/A 5 Obsolete 4 Transport Dependent 3:0 Reserved
STATUS	**Bit** **Description** 7:6 Transport Dependent 5 DEVICE FAULT bit 4 N/A 3 Transport Dependent 2 N/A 1 SENSE DATA AVAILABLE bit 0 ERROR bit

12.5.1 Overview

This command enables the host to alter the device's microcode. The data transferred using the Download Microcode commands is vendor specific.

In reloading new microcode, when the spin-up of the device is disabled, the device spins down after reloading new microcode.

The device may abort the Download Microcode command and discard all previously downloaded Microcode, if the current buffer offset is not equal to the sum of the previous Download Microcode command buffer offset and the previous sector count. The first Download Microcode command must have a buffer offset of zero. The new firmware should become effective immediately after the transfer of the last data segment has completed.

When the device detects the last Download Microcode command for the firmware download the device performs any device required verification and saves the complete set of downloaded microcode.
Power on reset prior to the receipt of the last segment will discard all of the microcode segments received.

This command is aborted when the device is in security locked mode.

12.5.2 Sector Number / Sector Count

All transfers be an integer multiple of the sector size. The size of the data transfer is determined by the contents of the Sector Number and Sector Count registers. The Sector Number register is used to extend the Sector Count register to create a 16-bit sector count value. The Sector Number register is the most significant eight bits and the Sector Count register is the least significant eight bits. A value of zero in both the Sector Number and Sector Count registers indicate no data is to be transferred.

12.5.3 Download with offsets and save microcode

A Features register value of 03h indicates that the microcode will be transferred in one or more Download Microcode commands using the offset transfer method and stored for deferred update. The buffer offset value is defined by the value in Cylinder registers. The buffer offset value is the starting location in the microcode file, which varies in 512 byte increments. All microcode segments will be sent to the device in sequence.

12.5.4 Download with offsets and save microcode for future use

A Features register value of 0Eh indicates that the microcode will be transferred in one or more Download Microcode commands using the offset transfer method and stored for deferred update. The buffer offset value is defined by the value in Cylinder registers. The buffer offset value is the starting location in the microcode file, which varies in 512 byte increments.
All microcode segments will be sent to the device in sequence.

12.5.5 Activate downloaded microcode

The device may abort the Download Microcode command and discard all previously downloaded Microcode, if the current buffer offset is not equal to the sum of the previous Download Microcode command buffer offset and the previous sector count. The first Download Microcode command must have a buffer offset of zero.
After the transfer of the last data segment has completed, the device performs any device required verification and stores the complete set of downloaded microcode which has not been activated. The new firmware will be activated after the device receives following Download Microcode command with a Features register value of 0Fh.
Power on reset prior to the receipt of the last segment or activate downloaded microcode will discard all of the microcode segments which are received or stored.

12.5.6 Error Outputs

ABT will be set to 1 in the Error Register if the value in the Feature register is neither 03h, 07h, 0Eh nor 0Fh, or the device is in Security Locked mode. When the reload of new microcode is requested in the data sent by the host for this Download command, UNC error will be set to 1 in the Error Register if the device fails to reload new microcode. This error is reported only when the reload of microcode is requested.

12.6 Download Microcode DMA (93h)

Table 103 Download Microcode DMA Command (93h)

Command Input

Field	Description
FEATURE	SUBCOMMAND field
COUNT	BLOCK COUNT field(7:0)
LBA	**Bit** **Description** 27:24 Reserved 23:8 BUFFER OFFSET field 7:0 BLOCK COUNT field (15:8)
DEVICE	**Bit** **Description** 7:5 Obsolete 4 Transport Dependent 3:0 Reserved
Command	7:0 93h

Normal Outputs

Field	Description
FEATURE	Subcommand code. 03h : Download with offsets and save microcode. (See Section 12.6.3) 07h : Download and save microcode. 0Eh : Download with offsets and save microcode for future use. (See Section 12.6.4) 0Fh : Activate downloaded microcode. (See Section 12.6.5) Other values are reserved.
COUNT	Lower byte of 16-bit sector count value to transfer from the host. (See Section 12.6.2)
NUMBER	Higher byte of 16-bit sector count value to transfer from the host. (See Section 12.6.2)
CYLINDER	Buffer offset (only used for Feature = 03h, 0Eh)

Error Register

See Error Outputs in Section 12.5 Download Microcode (92h)

12.6.1 Overview

This command enables the host to alter the device's microcode. The data transferred using the Download Microcode DMA commands is vendor specific.
In reloading new microcode, when the spin-up of the device is disabled, the device spins down after reloading new microcode.

The device may abort the Download Microcode DMA command and discard all previously downloaded Microcode, if the current buffer offset is not equal to the sum of the previous Download Microcode DMA command buffer offset and the previous sector count. The first Download Microcode DMA command must have a buffer offset of zero.
The new firmware should become effective immediately after the transfer of the last data segment has completed.
When the device detects the last Download Microcode command for the firmware download the device performs any device required verification and saves the complete set of downloaded microcode.
Power on reset prior to the receipt of the last segment will discard all of the microcode segments received.

This command is aborted when the device is in security locked mode.

12.6.2 Sector Count / Sector Number

All transfers shall be an integer multiple of the sector size. The size of the data transfer is determined by the contents of the Sector Number and Sector Count registers. The Sector Number register is used to extend the Sector Count register to create a 16-bit sector count value. The Sector Number register is the most significant eight bits and the Sector Count register is the least significant eight bits.

12.6.3 Download with offsets and save microcode

A Features register value of 03h indicates that the microcode will be transferred in one or more Download Microcode DMA commands using the offset transfer method. The buffer offset value is defined by the value in Cylinder registers. The buffer offset value is the starting location in the microcode file, which varies in 512 byte increments. All microcode segments will be sent to the device in sequence.

12.6.4 Download with offsets and save microcode for future use

A Features register value of 0Eh indicates that the microcode will be transferred in one or more Download Microcode DMA commands using the offset transfer method and stored for deferred update. The buffer offset value is defined by the value in Cylinder registers. The buffer offset value is the starting location in the microcode file, which varies in 512 byte increments. All microcode segments will be sent to the device in sequence.

12.6.5 Activate downloaded microcode

The device may abort the Download Microcode DMA command and discard all previously downloaded Microcode, if the current buffer offset is not equal to the sum of the previous Download Microcode DMA command buffer offset and the previous sector count. The first Download Microcode DMA command must have a buffer offset of zero.

After the transfer of the last data segment has completed, the device performs any device required verification and stores the complete set of downloaded microcode which has not been activated. The new firmware will be activated after the device receives following Download Microcode DMA command with a Features register value of 0Fh.

Power on reset prior to the receipt of the last segment or activate downloaded microcode will discard all of the microcode segments which are received or stored.

12.6.6 Error Outputs

ABT will be set to 1 in the Error Register if the value in the Feature register is neither 03h, 07h, 0Eh nor 0Fh, or the device is in Security Locked mode. When the reload of new microcode is requested in the data sent by the host for this Download command, UNC error will be set to 1 in the Error Register if the device fails to reload new microcode. This error is reported only when the reload of microcode is requested.

12.7 Execute Device Diagnostic (90h)

Table 104 Execute Device Diagnostic Command (90h)

Command Input

Field	Description
FEATURE	N/A
COUNT	N/A
LBA	N/A
DEVICE	**Bit** **Description** 7 Obsolete 6 N/A 5 Obsolete 4 Transport Dependent 3:0 Reserved
Command	7:0 90h

Normal Outputs

Field	Description
ERROR	Diagnostic Results – The diagnostic code as described in Table 34 is returned.
COUNT	0x01
LBA	0x00ABCD01
DEVICE	**Bit** **Description** 7 Obsolete 6 N/A 5 Obsolete 4 Transport Dependent 3:0 Reserved
STATUS	**Bit** **Description** 7:6 Transport Dependent 5 DEVICE FAULT bit 4 N/A 3 Transport Dependent 2 N/A or ALIGNMENT ERROR bit 1 SENSE DATA AVAILABLE bit 0 For ATAPI devices. the CHECK CONDITION bit For ATA devices, be cleared to zero

The Execute Device Diagnostic command performs the internal diagnostic tests implemented by the device. The results of the test are stored in the Error Register.

The normal Error Register bit definitions do not apply to this command. Instead, the register contains a diagnostic code. See Table 34 for its definition.

12.8 Finish Zone Ext (9Fh/02h)

The Finish Zone Ext command requests that one or more Finish Zone functions be performed. The device may write the substitute data pattern to the media for unwritten LBAs.
The Finish Zone Ext command is a Non-Data ZAC Management Out command and is able to use the template's NCQ encapsulation capability.

Table 105 Finish Zone Ext Command (9Fh/02h)

Command Input

Field	Description
FEATURE	**Bit** **Description** 15:9 Reserved 8 FINISH ALL bit 7:5 Reserved 4:0 ZM_ACTION field shall be set to 02h
COUNT	ZONE COUNT field
LBA	ZONE ID field
DEVICE	**Bit** **Description** 7 Obsolete 6 Shall be set to one 5 Obsolete 4 Transport Dependent – See ACS-5 3:0 Reserved
Command	7:0 9Fh

12.8.1 FINISH ALL bit

If the FINISH ALL bit is set to one, the device shall ignore the contents of the ZONE ID field and process a Finish Zone function (see Section) for each zone with a Zone Condition of IMPLICITLY OPENED, EXPLICITLY OPENED, or CLOSE.
The FINISH ALL bit in combination with the ZONE COUNT field and the ZONE ID field specifies how the command is processed as described in Section 12.8.4.

12.8.2 ZONE COUNT field

The ZONE COUNT field specifies the number of logically contiguous zones that the device is requested to process, starting with the zone specified by the ZONE ID field.

A ZONE COUNT field cleared to zero or set to one specifies a zone range that contains only one zone.

12.8.3 ZONE ID field

The ZONE ID field specifies the lowest LBA of the write pointer zone for which the device is requested to process the command specified by the ZM_ACTION field and the COMMAND field.

12.8.4 Finish Zone Ext command processing

If the device has not returned command completion with an error for the Finish Zone Ext command, then the device processes the command as shown in the following table.

Table 106 Finish Zone Ext command processing

ALL bit	ZONE COUNT field	Description
zero	zero or more	If the specified zone has a Zone Condition of: a) EMPTY, IMPLICITLY OPENED, EXPLICITLY OPENED, or CLOSED, then the device shall perform a Finish Zone function on the specified zone and b) FULL, then the device shall make no changes in the Zone Condition and shall return command completion without error.
	two or more	For each zone in the specified zone range that has a Zone Condition of IMPLICITLY OPENED or EXPLICITLY OPENED, the device server shall perform a Finish Zone function.
one	zero	For each zone on the device that has a Zone Condition of IMPLICITLY OPENED or EXPLICITLY OPENED, the device server shall perform a Finish Zone function.
	non-zero	See Section 12.8.1

Normal Outputs

See Normal Outputs in Section 12.9 Flush Cache (E7h)

Error Outputs

See Error Outputs in Section 12.5 Download Microcode (92h)

12.9 Flush Cache (E7h)

This command causes the device to complete writing data from its cache. The device returns good status after data in the write cache is written to disk media.

Table 107 Flush Cache Command (E7h)

Command Input

Field	Description
FEATURE	N/A
COUNT	N/A
LBA	N/A
DEVICE	**Bit** **Description** 7 Obsolete 6 N/A 5 Obsolete 4 Transport Dependent 3:0 Reserved
Command	7:0 E7h

Normal Outputs

Field	Description
ERROR	N/A
COUNT	N/A
LBA	N/A
DEVICE	**Bit** **Description** 7 Obsolete 6 N/A 5 Obsolete 4 Transport Dependent 3:0 Reserved
STATUS	**Bit** **Description** 7:6 Transport Dependent 5 DEVICE FAULT bit 4 N/A 3 Transport Dependent 2 N/A or ALIGNMENT ERROR bit 1 SENSE DATA AVAILABLE bit 0 ERROR bit

Error Outputs

Field	Description
ERROR	**Bit** **Description** 7:3 N/A 2 ABORT bit 1:0 N/A
COUNT	N/A
LBA	LBA of First Unrecoverable Error
DEVICE	**Bit** **Description** 7 Obsolete 6 N/A 5 Obsolete 4 Transport Dependent 3:0 Reserved
STATUS	**Bit** **Description** 7:6 Transport Dependent 5 DEVICE FAULT bit 4 N/A 3 Transport Dependent 2 N/A 1 SENSE DATA AVAILABLE bit 0 ERROR bit

12.10 Flush Cache Ext (EAh)

This command causes the device to complete writing data from its cache. The device returns good status after data in the write cache is written to disk media.

Table 108 Flush Cache Ext Command (EAh)

Command Input

Field	Description
FEATURE	Reserved
COUNT	Reserved
LBA	Reserved
DEVICE	**Bit** **Description** 7 Obsolete 6 N/A 5 Obsolete 4 Transport Dependent 3:0 Reserved
Command	7:0 EAh

Normal Outputs

Field	Description
ERROR	Reserved
COUNT	Reserved
LBA	Reserved
DEVICE	**Bit** **Description** 7 Obsolete 6 N/A 5 Obsolete 4 Transport Dependent 3:0 Reserved
STATUS	**Bit** **Description** 7:6 Transport Dependent 5 DEVICE FAULT bit 4 N/A 3 Transport Dependent 2 N/A or ALIGNMENT ERROR bit 1 SENSE DATA AVAILABLE bit 0 ERROR bit

Error Outputs

Field	Description
ERROR	**Bit** **Description** 7:3 N/A 2 ABORT bit 1:0 N/A
COUNT	N/A
LBA	LBA of First Unrecoverable Error
DEVICE	**Bit** **Description** 7 Obsolete 6 N/A 5 Obsolete 4 Transport Dependent 3:0 Reserved
STATUS	**Bit** **Description** 7:6 Transport Dependent 5 DEVICE FAULT bit 4 N/A 3 Transport Dependent 2 N/A 1 SENSE DATA AVAILABLE bit 0 ERROR bit

12.11 Format Unit (F7h)

The Format Unit command initializes all user data sectors after merging reassigned sector location into the defect information of the device and clearing the reassign information. Both new reassign information and new defect information are available right after command completion of this command. Previous information of reassign and defect are erased from the device by executing this command.

Note that the Format Unit command initializes from LBA 0 to Native MAX LBA regardless of setting by Initialize Device Parameter (91h) command, Device Configuration Overlay, or Set Max Address (F9h) command, so the protected area defined by these commands is also initialized.
Security Erase Prepare (F3h) commands should be completed just prior to the Format Unit command. If the device receives a Format Unit command without a prior Security Erase Prepare command, the device aborts the Format Unit command.
All values in Feature register are reserved, and any values other than 11h should not be put into Feature register.
This command does not request to data transfer.

Command execution time depends on drive capacity. To determine command timeout value, Word 89 of Identify Device data should be referred.

Table 109 Format Unit Command (F7h)

Command Input

Field	Description
FEATURE	11h
COUNT	Reserved
LBA	Reserved
DEVICE	**Bit** **Description** 7:5 Obsolete 4 Transport Dependent 3:0 Reserved
Command	7:0 F7h

Normal Outputs

Field	Description
ERROR	Reserved
COUNT	Reserved
LBA	N/A
DEVICE	**Bit** **Description** 7 Obsolete 6 N/A 5 Obsolete 4 Transport Dependent 3:0 Reserved
STATUS	**Bit** **Description** 7:6 Transport Dependent 5 DEVICE FAULT bit 4 N/A 3 Transport Dependent 2 N/A or ALIGNMENT ERROR bit 1 SENSE DATA AVAILABLE bit 0 ERROR bit

Error Outputs

Field	Description
ERROR	**Bit** **Description** 7:3 N/A 2 ABORT bit 1:0 N/A
COUNT	N/A
LBA	N/A
DEVICE	**Bit** **Description** 7 Obsolete 6 N/A 5 Obsolete 4 Transport Dependent 3:0 Reserved

12.12 Get Physical Element Status – (12h, DMA)

12.12.1 Feature Set

This 48-bit command is for devices that support the Storage Element Depopulation feature set.

12.12.2 Description

The GET PHYSICAL ELEMENT STATUS command requests that the device return status information for physical elements within the device.

12.12.3 Inputs

Table 110 GET PHYSICAL ELEMENT STATUS command inputs

Field	Description
FEATURE	**Bit** **Description** 15:14 FILTER field 13:12 Reserved 11:8 REPORT TYPE field 7:0 Reserved
COUNT	REQUESTED PAGE COUNT field
LBA	STARTING ELEMENT field
DEVICE	**Bit** **Description** 7 Obsolete 6 Reserved 5 Obsolete 4 Transport Dependent 3:0 Reserved
COMMAND	7:0 12h

12.12.3.1 FILTER field

The FILTER field selects the information to be returned by the GET PHYSICAL ELEMENT STATUS command.

Table 111 FILTER field

Code	Description
00b	Return descriptors for all elements matching the REPORT TYPE field
01b	Return descriptors for all elements matching the REPORT TYPE field for which the value of the physical element health field is: a) greater than or equal to 65h and less than or equal to CFh (i.e., outside manufacturer's specification limit); b) equal to FBh (i.e., depopulation revocation has completed with error); c) equal to FCh (i.e., depopulation revocation has been initiated and not completed); d) equal to FDh (i.e., depopulation has completed with error); e) equal to FEh (i.e., depopulation has been initiated and not completed); or f) equal to FFh (i.e., depopulation has been successfully completed)
All others	Reserved

12.12.3.2 REPORT TYPE field

The REPORT TYPE field specifies the information to be returned by the GET PHYSICAL ELEMENT STATUS command.

Table 112 REPORT TYPE field

Code	Description
00b	Return descriptors for all elements matching the REPORT TYPE field
01b	Return descriptors for all elements matching the REPORT TYPE field for which the value of the physical element health field is: a) greater than or equal to 65h and less than or equal to CFh (i.e., outside manufacturer's specification limit); or b) equal to FFh (i.e., depopulated)
All others	Reserved

12.12.3.3 REQUESTED PAGE COUNT field

The REQUESTED PAGE COUNT field specifies the number of pages of data requested to be returned. The device shall return the number of 512-byte pages specified in the REQUESTED PAGE COUNT field. Pad bytes are appended as needed to meet this requirement. Pad bytes shall have a value of 00h.

Unless otherwise specified, if the REQUESTED PAGE COUNT field specifies fewer 512-byte pages than the device has available to return, then the device:

a) shall truncate the returned data to the specified number of 512-byte pages; and
b) shall not modify any of the returned data as a result of the truncation.

If the REQUESTED PAGE COUNT field specifies more 512-byte pages than the device has available to return, then 512 bytes of all zeros shall be returned for those pages for which the device has no data to return.

The value 0000h is reserved in the REQUESTED PAGE COUNT field.

12.12.3.4 STARTING ELEMENT field

The STARTING ELEMENT field specifies the identifier of the first physical element addressed by this command. If the specified starting element is invalid, then the device shall return command aborted with sense key set to ILLEGAL REQUEST and the additional sense code set to INVALID FIELD IN CDB.

12.12.4 Normal Outputs

Table 113 Generic Normal Output (No LBA Return Value) for Normal Output

Field	Description
ERROR	N/A
COUNT	N/A
LBA	N/A
DEVICE	**Bit** **Description** 7 Obsolete 6 N/A 5 Obsolete 4 Transport Dependent 3:0 Reserved
STATUS	**Bit** **Description** 7:6 Transport Dependent 5 DEVICE FAULT bit 4 N/A 3 Transport Dependent 2 N/A or ALIGNMENT ERROR bit 1 SENSE DATA AVAILABLE bit 0 ERROR bit

12.12.5 Error Outputs

If the SENSE DATA AVAILABLE bit is set to one, then an additional sense code is available to be returned (see SPC-5).

Field	Description
ERROR	**Bit** **Description** 7 INTERFACE CRC bit 6:3 N/A 2 ABORT bit 1:0 N/A
COUNT	N/A
LBA	N/A
DEVICE	**Bit** **Description** 7 Obsolete 6 N/A 5 Obsolete 4 Transport Dependent 3:0 Reserved
STATUS	**Bit** **Description** 7:6 Transport Dependent 5 DEVICE FAULT bit 4 N/A 3 Transport Dependent 2 N/A 1 SENSE DATA AVAILABLE bit 0 ERROR bit

12.12.6 Input from the Device to the Host Data Structure

12.12.6.1 Overview

The format of the data input from the device to the host (see Table 114) includes header information followed by a physical element descriptor list consisting of physical element status descriptor 0 through physical element status descriptor N.

Table 114 GET PHYSICAL ELEMENT STATUS input from device to host

Offset	Description
0..3	NUMBER OF DESCRIPTORS field (DWord)
4..7	NUMBER OF DESCRIPTORS RETURNED field (DWord)
8..11	IDENTIFIER OF ELEMENT BEING DEPOPULATED field (DWord)
12..31	Reserved
32..63	Physical element status descriptor 0 (Bytes)
64..95	Physical element status descriptor 1 (Bytes)
..	
s-31 .. s	Physical element status descriptor N (Bytes)
S+1 .. (512 x pc-1)	Zero padding

where:

s is the offset of the last byte of the last physical element status descriptor; and

pc is the requested page count

Zero padding shall be set to zero.

12.12.6.2 NUMBER OF DESCRIPTORS field

The NUMBER OF DESCRIPTORS field shall contain the number of descriptors in the element descriptors list. The element descriptors list is a list of physical elements that:

a) meet the requirements of the REPORTING OPTIONS field;
b) meet the requirements of the FILTER field; and
c) have an element identifier that is greater than or equal to the element identifier specified by the STARTING ELEMENT field in the command.

Due to processing considerations outside the scope of this standard, two GET PHYSICAL ELEMENT STATUS commands with identical values in all command fields may result in two different values in the ELEMENT LIST LENGTH field.

12.12.6.3 NUMBER OF DESCRIPTORS RETURNED field

The NUMBER OF DESCRIPTORS RETURNED field contains the number of physical element status descriptors in the input from the device to host data.

12.12.6.4 IDENTIFIER OF ELEMENTS BEING DEPOPULATED field

The IDENTIFIER OF ELEMENT BEING DEPOPULATED field contains the element identifier of the element that is in the process of being depopulated. If the value of this field is cleared to zero, then no action specified as result of repurposing depopulation is in progress.

12.12.6.5 Physical element status descriptor format

12.12.6.5.1 Overview

The physical element status descriptor contains status information for a physical element. The physical element status descriptors shall be sorted in ascending order of the element identifier.

Table 115 Physical element status descriptor

Offset	Description
0..3	Reserved
4..7	ELEMENT IDENTIFIER field (DWord)
8..12	Reserved
13	**Bit** **Depopulation flags** (Byte) 7:1 Reserved 0 RESTORATION ALLOWED bit
14	PHYSICAL ELEMENT TYPE field (Byte)
15	PHYSICAL ELEMENT HEALTH field (Byte)
16 .. 23	ASSOCIATED CAPACITY field (QWord)
24 .. 31	Reserved

12.12.6.5.2 ELEMENT IDENTIFIER field

The ELEMENT IDENTIFIER field contains an identifier of the physical element (e.g., storage element) associated with this physical element status descriptor.

12.12.6.5.3 RESTORATION ALLOWED bit

If the RESTORATION ALLOWED bit is cleared to zero, then this physical element:
a) has not been depopulated or
b) has been depopulated and is not a candidate for being restored.

If the RESTORATION ALLOWED bit is set to one, then this physical element has been depopulated and is a candidate for being restored.

12.12.6.5.4 PHYSICAL ELEMENT TYPE field

The PHYSICAL ELEMENT TYPE field indicates the type of the physical element associated with this physical element status descriptor.

Table 116 PHYSICAL ELEMENT TYPE field

Code	Description
00b	Reserved
01b	Storage element
All others	Reserved

12.12.6.5.5 PHYSICAL ELEMENT HEALTH field

The PHYSICAL ELEMENT HEALTH field indicates the health of the physical element associated with this physical element status descriptor.

Table 117 PHYSICAL ELEMENT HEALTH field

Code	Description
00h	not reported
01h to 63h[a]	within manufacturer's specification limits
64h	at manufacturer's specification limit
65h to CFh	outside manufacturer's specification limit
D0h to FEh[a]	Reserved
FFh	depopulated
[a] the device may implement a subset of values	

12.12.6.5.6 ASSOCIATED CAPACITY field

The ASSOCIATED CAPACITY field indicates the number of logical blocks by which the capacity of the device is reduced if the physical element associated with this physical element status descriptor becomes depopulated. A value of FFFF_FFFF_FFFF_FFFFh indicates that the number of logical blocks by which the capacity of the device is reduced is not specified.

12.13 Identify Device (ECh)

The Identify Device command requests the device to transfer configuration information to the host. The device will transfer a sector to the host containing the information described in the following pages.

Table 118 Identify Device Command (ECh)

Command Input

Field	Description	
FEATURE	N/A	
COUNT	N/A	
LBA	N/A	
DEVICE	**Bit**	**Description**
	7	Obsolete
	6	N/A
	5	Obsolete
	4	Transport Dependent
	3:0	Reserved
Command	7:0 ECh	

Normal Outputs

See Normal Outputs in Section12.9 Flush Cache (E7h)

Error Outputs

See Error Outputs in Section 12.5 Download Microcode (92h)

Table 119 Identify device information

Word	Content	Description	
00	045AH or 045EH	Drive classification, bit assignments:	
		15 (=0)	1=ATAPI device, 0=ATA device
		14:-8	Retired
		7 (=0)	1=removable cartridge device
		6 (=1)	1=fixed device
		5-3	Retired
		2 (=0)	Response incomplete
		1	Retired
		0 (=0)	Reserved
01	xxxxH	Number of cylinders in default translate mode (obsolete)	
02	C837H	Specific Configuration	
		37C8H:	Need Set Feature for spin-up after power-up Identify Device is incomplete
		738CH:	Need Set Feature for spin-up after power-up Identify Device is complete
		8C73H:	No Need Set Feature for spin-up after power-up Identify Device is incomplete
		C837H:	No Need Set Feature for spin-up after power-up Identify Device is complete
03	00xxH	Number of heads in default translate mode (obsolete)	
04	0 *	Reserved	
05	0 *	Reserved	
06	003FH	Number of sectors per track in default translate mode (obsolete)	
07	0000H *	Number of bytes of sector gap	
08	0000H *	Number of bytes in sync field	
09	0000H *	Reserved	

Word	Content	Description	
10-19	XXXX	Serial number in ASCII (0 = not specified)	
20	0003H *	Controller type: 0003: dual ported, multiple sector buffer with look-ahead read	
21	0000H *	Retired	
22	0038H *	Reserved	
23-26	XXXX	Microcode version in ASCII	
27-46	XXXX	Model number in ASCII	
47	80xxH	15-8 (=80H)	80h
		7-0 (=xxH)	Maximum number of sectors that can be transferred per interrupt on Read and Write Multiple commands If logical sector size is 512 bytes, the content of these bits are 10H. If logical sector size is 4096 bytes, the content of these bits are 02H.
48	400xH	Trusted Computing feature set options	
		15 (=0)	Shall be cleared to zero
		14 (=1)	Shall be set to one
		13-1 (=0)	Reserved for the Trusted Computing Group
		0 (=x)	0=Trusted Computing feature set is not supported 1=Trusted Computing feature set is supported
49	xF00H	Capabilities, bit assignments:	
		15-14 (=0)	Reserved
		13	Standby timer
		(=1)	values as specified in ATA standard are supported
		(=0)	values are vendor specific
		12 (=0)	Reserved
		11 (=1)	IORDY Supported
		10 (=1)	IORDY can be disabled
		9 (=1)	LBA supported
		8 (=1)	DMA supported
		7- 0 (=0)	Reserved
50	4000H	Capabilities, bit assignments:	
		15-14 (=01)	Word 50 is valid
		13-1 (=0)	Reserved
		0 (=0)	Minimum value of Standby timer less than 5 minutes
51	0200H	PIO data transfer cycle timing mode	
52	0200H *	DMA data transfer cycle timing mode Refer Word 62 and 63	
53	0007H	Validity flag of the Word	
		15-8 (=0)	Free-fall Control Sensitivity 00h = Vendor's recommended setting
		7-3 (=0)	Reserved
		2 (=1)	1=Word 88 is Valid
		1 (=1)	1=Word 64-70 are Valid
		0 (=1)	1=Word 54-58 are Valid
54	xxxxH	Number of current cylinders (obsolete)	
55	xxxxH	Number of current heads (obsolete)	
56	xxxxH	Number of current sectors per track (obsolete)	
57-58	xxxxH	Current capacity in sectors (obsolete) Word 57 specifies the low Word of the capacity	
59	xxxxH	Sanitize capabilities and Current Multiple setting. Bit assignments	
		15 (=0)	The BLOCK ERASE EXT command is not supported
		14 (=0)	The OVERWRITE EXT command is not supported
		13 (=0 or 1)	The CRYPTO SCRAMBLE EXT command is supported

Word	Content	Description	
		12 (=1)	The Sanitize Device Feature Set is supported
		11 (=1)	The commands allowed during a sanitize operation
		10 (=0)	The Sanitize AntiFreeze Lock command is not supported
		9 (=0)	Reserved
		8	1= Multiple Sector Setting is Valid
		7-0	xxh = Current setting for number of sectors
60-61	xxxxH	Total Number of User Addressable Sectors Word 60 specifies the low Word of the number FFFFFFFh=The 48-bit native max address is greater than 268,435,455	
62	0000H	Reserved	
63	xx07H	Multiword DMA Transfer Capability	
		15- 8	Multi word DMA transfer mode active
		7-0 (=7)	Multi word DMA transfer modes supported (support mode 0,1 and 2)
64	0003H	Flow Control PIO Transfer Modes Supported	
		15-8 (=0)	Reserved
		7-0 (=3)	Advanced PIO Transfer Modes Supported
			'11' = PIO Mode 3 and 4 Supported
65	0078H	Minimum Multiword DMA Transfer Cycle Time Per Word	
		15-0 (=78)	Cycle time in nanoseconds (120ns, 16.6MB/s)
66	0078H	Manufacturer's Recommended Multiword DMA Transfer Cycle Time	
		15-0 (=78)	Cycle time in nanoseconds (120ns, 16.6MB/s)
67	0078H	Minimum PIO Transfer Cycle Time Without Flow Control	
		15-0 (=78)	Cycle time in nanoseconds (120ns, 16.6MB/s)
68	0078H	Minimum PIO Transfer Cycle Time With IORDY Flow Control	
		15-0 (=78)	Cycle time in nanoseconds (120ns, 16.6MB/s)
69	0Dx8H	Additional Supported	
		13 (=0)	Long Physical Sector Alignment Err Reporting Control is not supported
		12 (=0)	Reserved
		11 (=1)	READ BUFFER DMA command is supported
		10 (=1)	WRITE BUFFER DMA command is supported
		8 (=1)	DOWNLOAD MICROCODE DMA is supported
		4 (=0 or 1)	0 = Device May Not Encrypt All User Data on the device 1 = Device Encrypts All User Data on the device
		3 (=1)	Extended Number of User Addressable Sectors is supported
		1-0	Zoned field Host managed: 00
70-74	0000H	Reserved	
75	001FH	Queue depth	
		15-5 (=0)	Reserved
		4-0 (=1F)	Maximum queued depth – 1
76	970EH	SATA capabilities	
		15 (=1)	READ LOG DMA EXT command is supported
		14-13 (=0)	Reserved
		12 (=1)	High Priority command (Please see Section 6.5 First-party DMA
		11 (=0)	Unload while NCQ commands are outstanding is supported
		10 (=1)	Phy event counters
		9 (=1)	Receipt of host-initiated interface power management requests
		8 (=1)	Native Command Queuing supported
		7-4 (=0)	Reserved
		3 (=1)	SATA Gen-3 speed (6.0Gbps) supported
		2 (=1)	SATA Gen-2 speed (3.0Gbps) supported

Word	Content	Description	
		1 (=1)	SATA Gen-1 speed (1.5Gbps) supported
		0 (=0)	Reserved
77	007xH	15-9 (=0)	Reserved
		8 (=0 or 1)	Power Disable feature always enabled
		7 (=0)	Reserved
		6 (=1)	Support RECEIVE FPDMA QUEED and SEND FPDMA QUEUED
		5 (=1)	Supports NCQ Non-Data Command
		4 (=1)	Supports NCQ Streaming
		3-1 (=011)	Current negotiated SATA speed Gen-3 speed of 6.0Gbps
		(=010)	Current negotiated SATA speed Gen-2 speed of 3.0Gbps
		(=001)	Current negotiated SATA speed Gen-1 speed of 1.5Gbps
		0 (=0)	Reserved
78	0CDEH	SATA supported features	
		15-13 (=0)	Reserved
		12 (=0 or 1)	Power Disable feature
		11 (=1)	Rebuild Assist
		10 (=1)	Device Initiated Interface Power Management Software Settings
		9-8 (=0)	Reserved
		7 (=1)	NCQ Autosense
		6 (=1)	Software setting preservation
		5 (=0)	Reserved
		4 (=1)	In-order data delivery
		3 (=1)	Device initiated interface power management
		2 (=1)	DMA Setup Auto-Activate optimization
		1 (=1)	Non-zero buffer offset in DMA Setup FIS
		0 (=0)	Reserved
79	0040H	SATA enabled features	
		15-12 (=0)	Reserved
		11 (=0)	Rebuild Assist feature set
		10 (=0 or 1)	Power Disable feature
		9-7 (=0)	Reserved
		6 (=1)	Software setting preservation
		5 (=0)	Reserved
		4 (=0)	In-order data delivery
		3 (=0)	Device initiated interface power management
		2 (=0)	DMA Setup Auto-Activate optimization
		1 (=0)	Non-zero buffer offset in DMA Setup FIS
		0 (=0)	Reserved
80	1FFCH	Major version number	
		15-0 (=1FFCh)	ATA-2, ATA-3, ATA/ATAPI-4, ATA/ATAPI-5, ATA/ATAPI-6. ATA/ATAPI-7 and ATA8-ACS and ACS-2, ACS-3, ACS-5, ACS-5
81	0000H	Minor version number is not reported	
82	746BH	Command set supported	
		15 (=0)	Reserved
		14 (=1)	NOP command
		13 (=1)	READ BUFFER command
		12 (=1)	WRITE BUFFER command
		11 (=0)	Reserved
		10 (=1)	Host Protected Area Feature Set
		9 (=0)	DEVICE RESET command
		8 (=0)	SERVICE interrupt
		7 (=0)	Release interrupt
		6 (=1)	LOOK AHEAD

Word	Content	Description	
		5 (=1)	WRITE CACHE
		4 (=0)	PACKET Command feature set
		3 (=1)	Power management feature set
		2 (=0)	Removable feature set
		1 (=1)	Security feature set
		0 (=1)	SMART feature Set
83	7D69H	Command set supported	
		15-14(=01)	Word 83 is valid
		13 (=1)	FLUSH CACHE EXT command supported
		12 (=1)	FLUSH CACHE command supported
		11 (=1)	Device Configuration Overlay command supported
		10 (=1)	48-bit Address feature set supported
		9 (=0)	Reserved
		8 (=1)	SET Max Security extension
		7 (=0)	Set Features Address Offset feature mode
		6 (=1)	SET FEATURES subcommand required to spin-up after power-up
		5 (=1)	Power-Up In Standby feature set supported
		4 (=0)	Removable Media Status Notification feature
		3 (=1)	Advanced Power Management feature set
		2 (=0)	CFA feature set
		1 (=0)	READ/WRITE DMA QUEUED
		0 (=1)	Download Microcode command
84	4163H	Command set/feature supported extension	
		15-14 (=01)	Word 84 is valid
		13 (=0)	IDLE IMMEDIATE with UNLOAD FEATURE supported
		12-11(=0)	Reserved
		10 (=0)	URG bit supported for WRITE STREAM DMA Ext and WRITE STREAM Ext
		9 (=0)	URG bit supported for READ STREAM DMA Ext and READ STREAM Ext
		8 (=1)	Worldwide name supported
		7 (=0)	WRITE DMA QUEUED FUA EXT command supported
		6 (=1)	WRITE DMA FUA EXT and WRITE MULTIPLE FUA EXT commands supported
		5 (=1)	General Purpose Logging feature set supported
		4 (=0)	Streaming feature set supported
		3 (=0)	Media Card Pass Through Command feature set supported
		2 (=0)	Media serial number supported
		1 (=1)	SMART self-test supported
		0 (=1)	SMART error logging supported
85	xxxxH	Command set/feature enabled	
		15	Reserved
		14	NOP command
		13	READ BUFFER command
		12	WRITE BUFFER command
		11	Reserved
		10	Host Protected Area feature set
		9	DEVICE RESET command
		8	SERVICE interrupt
		7	RELEASE interrupt
		6	LOOK AHEAD
		5	WRITE CACHE
		4	PACKET Command feature set

Word	Content	Description	
		3	Power management feature set
		2	Removable media feature set
		1	Security feature set
		0	SMART feature set
86	xxxxH	Command set/feature enabled	
		15	Words 120:119 are valid.
		14	Reserved
		13	FLUSH CACHE EXT command supported
		12	FLUSH CACHE command supported
		11	Device Configuration Overlay command enabled
		10	48-bit Address features set supported
		9	Reserved
		8	Set Max Security extensions enabled
		7	Set Features Address Offset mode
		6	Set Features subcommand required to spin-up after power-up
		5	Power-Up In Standby feature set enabled
		4	Removable Media Status Notification feature
		3	Advanced Power Management Feature set
		2	CFA Feature set
		1	READ/WRITE DMA QUEUED
		0	Download Microcode command
87	4163H	Command set/feature default	
		15-14(=01)	Word 87 is valid
		13(=0)	IDLE IMMEDIATE with UNLOAD FEATURE supported
		12-11(= 0)	Reserved
		10 (=0)	URG bit supported for WRITE STREAM DMA Ext and WRITE STREAM Ext
		9 (=0)	URG bit supported for READ STREAM DMA Ext and READ STREAM Ex
		8 (=1)	Worldwide name supported
		7 (=0)	WRITE DMA QUEUED FUA EXT command supported
		6 (=1)	WRITE DMA FUA EXT and WRITE MULTIPLE FUA EXT commands supported
		5 (=1)	General Purpose Logging feature set supported
		4 (=0)	Valid CONFIGURE STREAM command has been executed
		3 (=0)	Media Card Pass Through Command feature set enabled
		2 (=0)	Media serial number is valid
		1 (=1)	SMART self-test supported
		0 (=1)	SMART error logging supported
Word	**Content**	**Description**	
88	xx7FH	Ultra DMA Transfer modes	
		15-8 (=xx)	Current active Ultra DMA transfer mode
			15 Reserved (=0)
			14 Mode 6 1 = Active 0 = Not Active
			13 Mode 5 1 = Active 0 = Not Active
			12 Mode 4 1 = Active 0 = Not Active
			11 Mode 3 1 = Active 0 = Not Active
			10 Mode 2 1 = Active 0 = Not Active
			9 Mode 1 1 = Active 0 = Not Active
			8 Mode 0 1 = Active 0 = Not Active

Word	Content	Description		
		7-0 (=7F)	Ultra DMA Transfer mode supported	
			7	Reserved (=0)
			6	Mode 6 1 = Support
			5	Mode 5 1 = Support
			4	Mode 4 1 = Support
			3	Mode 3 1 = Support
			2	Mode 2 1 = Support
			1	Mode 1 1 = Support
			0	Mode 0 1 = Support
89	xxxxH	Time required for security erase unit completion		
		15	1=Extended Time is reported in bits 14:0	
			0=Time is reported in bits 7:0	
		If bit 15 is set to one		
		14:0	Time required for security erase unit completion	
		Time= value(xxxxh)x2 [minutes]		
		If bit 15 is set to zero		
		14:8	Reserved	
		7:0	Time required for security erase unit completion	
		Time= value(xxxxh)x2 [minutes]		
90	xxxxH	Time required for Enhanced security erase completion		
		15	1=Extended Time is reported in bits 14:0	
			0=Time is reported in bits 7:0	
		If bit 15 is set to one		
		14:0	Time required for Enhanced security erase completion	
		If bit 15 is set to zero		
		14:8	Reserved	
		7:0	Time required for Enhanced security erase completion	
91	00FEH	Current Advanced power management value		
92	FFFEH	Current Password Revision Code		
93	0000H	COMRESET result		
94	0000H	Reserved		
95	xxxxH	Stream Minimum Request Size Number of sectors that provides optimum performance in streaming environment. This number shall be a power of two, with a minimum of eight sectors (4096 bytes). The starting LBA value for each streaming command should be evenly divisible by this request size.		
96	xxxxH	Streaming Transfer Time – DMA The worst-case sustainable transfer time per sector for the device is calculated as follows: Streaming Transfer Time = (word 96) * (words(99:98) / 65536) If the Streaming Feature set is not supported by the device, the content of word 96 shall be zero.		
97	0000H	Streaming Access Latency – DMA and PIO The worst-case access latency of the device for a streaming command is calculated as follows: Access Latency = (word 97) * (words(99:98) / 256) If the Streaming Feature set is not supported by the device, the content of word 97 shall be zero.		

Word	Content	Description	
98-99	xxxxH	Streaming Performance Granularity	
100-103	xxxxH	Total Number of User Addressable Logical Sectors for 48-bit commands	
104	xxxxH	Streaming Transfer Time – PIO The worst-case sustainable transfer time per sector for the device is calculated as follows: Streaming Transfer Time = (word 104) * (words(99:98) / 65536) If the Streaming Feature set is not supported by the device, the content of word 104 shall be zero.	
105	0000H	Reserved	
106	x00xH	Physical sector size / logical sector size	
		15 (=0)	Shall be cleared to zero
		14 (=1)	Shall be set to one.
		13 (=x)	Device has multiple logical sectors per physical sector If logical sector size is 512 bytes, the content of this bit is 1b. If logical sector size is 4096 bytes, the content of this bit is 0b.
		12 (=x)	Device logical sector is longer than 256 words If logical sector size is 512 bytes, the content of this bit is 0b. If logical sector size is 4096 bytes, the content of this bit is 1b.
		11-4 (=00H)	Reserved
		3-0 (=xH)	2^0 logical sectors per physical sector If logical sector size is 512 bytes, the content of these bits are 0011b. If logical sector size is 4096 bytes, the content of these bits are 0000b.
107	5A87H	Inter-seek delay for ISO-7779 acoustic testing in microseconds	
108-111	xxxxH	Worldwide name the optional value of the worldwide name for the device	
112-116	0000H	Reserved	
117-118	xxxxH	Words per logical sector This Word is set number of words per logical sector when sector size is longer than 256 words. If logical sector size is 512 bytes, the content of these bits are 0000H. If logical sector size is 4096 bytes, the content of these bits are 0800H.	
119	40DCh	Supported settings (Continued from Word 84:82)	
		15 (=0)	Shall be cleared to zero
		14 (=1)	Shall be set to one.
		13-10(=0)	Reserved
		9 (=0)	DSN feature set is not supported
		8 (=0)	Accessible Max Address Configuration feature set is not supported
		7 (=1)	Extended Power Conditions feature set is supported
		6 (=1)	Sense data is supported
		5 (=0)	Free-fall Control feature set is not supported
		4 (=1)	The segmented feature for Download Microcode is supported.
		3 (=1)	The READ/ WRITE LOG DMA EXT commands are supported.
		2 (=1)	WRITE UNCORRECTABLE EXT is supported and enabled.
		1 (=0)	Write-Read-Verify feature set is not supported
		0 (=0)	Reserved
120	40DCh	Command set/feature enabled/supported. (Continued from Word 87:85)	
		15 (=0)	Shall be cleared to zero
		14 (=1)	Shall be set to one.
		13-10(=0)	Reserved
		9 (=0)	DSN feature set is not enabled
		8 (=0)	Reserved
		7 (=1)	Extended Power Conditions feature set is enabled

Word	Content	Description	
		6 (=1)	Sense data is enabled
		5 (=0)	Free-fall Control feature set is disabled
		4 (=1)	The segmented feature for Download Microcode is supported.
		3 (=1)	The READ/ WRITE LOG DMA EXT commands are supported.
		2 (=1)	WRITE UNCORRECTABLE EXT is supported and enabled.
		1 (=0)	Write-Read-Verify feature set is not enabled
		0 (=0)	Reserved
121-126	0000H	Reserved	
127	0000H	Removable Media Status Notification feature set	
		0000H=Not supported	
128	xxxxH	Security status. Bit assignments	
		15-9	Reserved
		8	Security Level 1= Maximum, 0= High
		7-6	Reserved
		5	Enhanced erase 1= Support
		4	Expired 1= Expired
		3	Freeze 1= Frozen
		2	Lock 1= Locked
		1	Enabled/Disable 1= Enable
		0	Capability 1= Support
129	xxxxH *	Current Set Feature Option. Bit assignments	
		15-4	Reserved
		3	Auto reassign enabled 1= Enable
		2	Reverting enabled 1= Enable
		1	Read Look-ahead enabled 1= Enable
		0	Write Cache enabled 1= Enable
130-135	xxxxH *	Reserved	
136	xxxxH *	Vendor features supported	
		15 (=1)	Write Cache Enabled Data Safety feature is supported
		14 (=1)	Storage Element Depopulation feature set is supported
137	xxxxH *	Vendor features enabled	
		15 (=1)	Write Cache Enabled Data Safety feature is enabled
		14 (=0)	Storage Element Depopulation feature set is not enabled
138-159	xxxxH *	Reserved	
160-167	0000H	Reserved	
168	0002H	15-4	Reserved
		3-0	Device Nominal Form Factor 02H shows 3.5inch nominal form factor
169-175	0000H	Reserved	
176-205	0000H	Current media serial number (0000H=Not supported)	
206	0039H	SCT Command set support	
		15-12 (=0)	Vendor specific
		11-6 (=0)	Reserved
		5 (=1)	Action Code 5 (SCT Data Table) is supported
		4 (=1)	Action Code 4 (Features Control) is supported
		3 (=1)	Action Code 3 (Error Recovery Control) is supported
		2 (=0)	Action Code 2 (SCT Write Same) is not supported
		1 (=0)	Action Code 1 (Long Sector Access) is not supported
		0 (=1)	SCT Feature Set (includes SCT status) is supported
207-208	0000H	Reserved	
209	4000H	Alignment of logical blocks within a physical block (This Word is valid if bit 13 of Word 106 is set to one.)	
		15 (=0)	Shall be cleared to zero
		14 (=1)	Shall be set to one

Word	Content	Description	
		13-0 (=x)	Logical sector offset within the first physical sector where the first logical sector is placed
210-211	0000H	Write-Read-Verify Sector Count Mode 3 (Dword)	
		0000H=Not supported	
212-213	0000H	Write-Read-Verify Sector Count Mode 2 (Dword)	
		0000H=Not supported	
214	0000H	NV Cache Capabilities	
		0000H=Not supported	
215-216	0000H	NV Cache Size in Logical Blocks (Dword)	
217	1C20H	Nominal media rotation rate (=7200rpm)	
218	0000H	Reserved	
219	0000H	NV Cache Options	
		0000H=Not supported	
220	0000H	15-8 (=0)	Reserved
		7-0 (=0)	Write-Read-Verify feature set current mode(not supported)
221	0000H	Reserved	
222	17FFH	Transport major version number	
		15-12 (=1)	Transport Type (1= Serial)
		11 (=0)	Reserved
		10 (=1)	SATA Rev 3.5
		9 (=1)	SATA Rev 3.4
		8 (=1)	SATA Rev 3.3
		7 (=1)	SATA Rev 3.2
		6 (=1)	SATA Rev 3.1
		5 (=1)	SATA Rev 3.0
		4 (=1)	SATA Rev 2.6
		3 (=1)	SATA Rev 2.5
		2 (=1)	SATA II: Extensions
		1 (=1)	SATA 1.0a
		0 (=1)	ATA8-AST
223	0000H	Transport minor version number is not reported	
224-229	0000H	Reserved	
230-233	xxxxH	Extended Number of User Addressable Sectors	
234	0008H	Minimum number of 512-byte data blocks per Download Microcode command for mode 3	
235	0000H	Maximum number of 512-byte data blocks per Download Microcode command for mode 3	
236-254	0000H	Reserved	
255	xxA5H	15-8	Checksum. This value is the two's complement of the sum of all bytes in byte 0 through 510
		7-0	(A5) Signature

Note. The '' mark in 'Content' field indicates the use of those parameters are vendor specific.*

12.14 Idle (E3h/97h)

The Idle command causes the device to enter idle mode immediately and set auto power down timeout parameter (standby timer). And then the timer starts counting down.
When the Idle mode is entered, the device is spun up to operating speed. If the device is already spinning, the spin up sequence is not executed.

During Idle mode the device is spinning and ready to respond to host commands immediately.

Table 120 Idle Command (E3h/97h)

Command Input

Field	Description
FEATURE	N/A
COUNT	Standby timer period
LBA	N/A
DEVICE	**Bit** **Description** 7 Obsolete 6 N/A 5 Obsolete 4 Transport Dependent 3:0 Reserved
Command	7:0 E3h or 97h

Normal Outputs

See Normal Outputs in Section 12.9 Flush Cache (E7h)

Error Outputs

Field	Description
ERROR	**Bit** **Description** 7:3 N/A 2 ABORT bit 1:0 N/A
COUNT	N/A
LBA	LBA of First Unrecoverable Error
DEVICE	**Bit** **Description** 7 Obsolete 6 N/A 5 Obsolete 4 Transport Dependent 3:0 Reserved
STATUS	**Bit** **Description** 7:6 Transport Dependent 5 DEVICE FAULT bit 4 N/A 3 Transport Dependent 2 N/A 1 SENSE DATA AVAILABLE bit 0 ERROR bit

Standby timer period Timeout Parameter. If zero, then the automatic power down sequence is disabled. If non-zero, then the automatic power down sequence is enabled, and the timeout interval is shown below:

Value	Description
0	Timer disabled
1-240	Value * 5
241-251	(Value-240) * 30 minutes
252	21 minutes
253	Between 8 hours to 12 hours
254	Aborted
255	21 minutes 15 seconds

When the automatic power down sequence is enabled, the drive will enter Standby mode automatically if the timeout interval expires with no drive access from the host. The timeout interval will be reinitialized if there is a drive access before the timeout interval expires.

12.15 Idle Immediate (E1h/95h)

The Idle Immediate command causes the device to enter Idle mode.
The device is spun up to operating speed. If the device is already spinning, the spin up sequence is not executed.
During Idle mode the device is spinning and ready to respond to host commands immediately.

The Idle Immediate command will not affect to auto power down timeout parameter.

Table 121 Idle Immediate Command (E1h/95h)

Command Input

Field	Description
FEATURE	N/A except when the Unload feature is requested
COUNT	N/A except when the Unload feature is requested
LBA	N/A except when the Unload feature is requested
DEVICE	**Bit** **Description** 7 Obsolete 6 N/A 5 Obsolete 4 Transport Dependent 3:0 Reserved
Command	7:0 E1h

Normal Outputs

See Normal Outputs in Section 12.9 Flush Cache (E7h)

Error Outputs

See Error Outputs in Section 12.14 Idle (E3h/97h)

12.16 Initialize Device Parameters (91h)

The Initialize Device Parameters command enables the host to set the number of sectors per track and the number of heads minus 1, per cylinder. Words 54-58 in Identify Device Information reflect these parameters.
The parameters remain in effect until following events:

- Another Initialize Device Parameters command is received.
- The device is powered off.
- Soft reset occurs and the Set Feature option of CCh is set instead of 66h.

Table 122 Initialize Device Parameters Command (91h)

Command Block Normal Outputs								
Register	7	6	5	4	3	2	1	0
Data	-	-	-	-	-	-	-	-
Feature	-	-	-	-	-	-	-	-
Sector Count	V	V	V	V	V	V	V	V
Sector Number	-	-	-	-	-	-	-	-
Cylinder Low	-	-	-	-	-	-	-	-
Cylinder High	-	-	-	-	-	-	-	-
Device/Head	1	-	1	D	H	H	H	H
Command	1	0	0	1	0	0	0	1

Command Block Command Input								
Register	7	6	5	4	3	2	1	0
Data	-	-	-	-	-	-	-	-
Error	-	-	-	-	-	-	-	-
Sector Count	-	-	-	-	-	-	-	-
Sector Number	-	-	-	-	-	-	-	-
Cylinder Low	-	-	-	-	-	-	-	-
Cylinder High	-	-	-	-	-	-	-	-
Device/Head	-	-	-	-	-	-	-	-
Status	...See Below...							

Error Register							
7 CRC	6 UNC	5 0	4 IDN	3 0	2 ABT	1 T0N	0 AMN
0	0	0	0	0	V	0	0

Status Register							
7 BSY	6 RDY	5 DF	4 DSC	3 DRQ	2 COR	1 IDX	0 ERR
0	V	0	-	-	0	-	V

Output Parameters To The Device

Sector Count The number of sectors per track. 0 does not mean there are 256 sectors per track, but there is no sector per track.

H The number of heads minus 1 per cylinder. The minimum is 0 and the maximum is 15.

Note:
The following conditions needs to be satisfied to avoid invalid number of cylinders beyond FFFFh.
(Total number of user addressable sectors)/((Sector Count)*(H+1)) = < FFFFh
The total number of user addressable sectors is described in Identify Device command.

12.17 NCQ Non-Data (63h)

Table 123 NCQ Non-Data command (63h)

Command Input

Field	Description
FEATURE	**Bit** **Description** 15:8 Reserved 7:4 Subcommand specific 3:0 SUBCOMMAND field
COUNT	**Bit** **Description** 15:14 PRIO field 13:8 Reserved 7:3 NCQ TAG field 2:0 Reserved
LBA	**Bit** **Description** 47:8 Reserved 7:3 Subcommand specific 2:0 Reserved
AUXILIARY	15:0 Subcommand specific
DEVICE	**Bit** **Description** 7 Reserved 6 Shall be set to one 5 Reserved 4 Shall be cleared to zero 3:0 Reserved
Command	7:0 63h

Table 38 defines the NCQ Non-Data subcommands. See the referenced sections for additional information in this table.

The output from the host to the device, the command acceptance outputs for this command, the normal outputs for this command and the error outputs for this command are subcommand specific. See Section 12.17.1 and 12.17.2.

12.17.1 Abort NCQ Queue Subcommand (0h)

Table 124 Abort NCQ Queue Subcommand (0h)

Command Input

Field	Description
FEATURE	**Bit** **Description** 15:8 Reserved 7:4 ABORT TYPE field 3:0 Subcommand field – shall be set to 0h
COUNT	**Bit** **Description** 15:14 PRIO field 13:8 Reserved 7:3 NCQ TAG field 2:0 Reserved
LBA	**Bit** **Description** 47:8 Reserved 7:3 TTAG field 2:0 Reserved
DEVICE	**Bit** **Description** 7 Reserved 6 Shall be set to one 5 Reserved 4 Shall be cleared to zero 3:0 Reserved
Command	7:0 63h

Normal Outputs

If a supported Abort Type parameter is specified, then the device indicates success, even if the command results in no commands being aborted.

When an Abort NCQ Queue command completes successfully, a Set Device Bits FIS is sent to the host to complete the Abort subcommand and commands that were aborted as a consequence of the Abort subcommand by setting the ACT bits for those commands to one. This SDB FIS may also indicate other completed commands.

Error Outputs

The device returns command aborted if:

a) NCQ is disabled and an Abort NCQ Queue command is issued to the device;
b) the value of the TTAG field equals the value of the TAG field;
c) the value of the TTAG field is an invalid TAG number; or
d) an unsupported Abort type parameter is specified.

Output Parameters To The Device

Feature Current

Subcommand (bits 3-0) When bits(3:0) is 0h, Abort NCQ Queue Abort Subcommand.

Subcommand Specific (bits 7-4) Abort Type, bit(7:4), describes the action requested. The NCQ Non-Data Log (see Section 12.25.9) provides a list of abort types supported by the device. The value of Abort type is defined in the below the table.

Feature Previous

Sector Count Current .

TAG (bits 7-3) The TAG value is assigned to be different from all other queued commands. The value does not exceed the maximum queue depth specified by the Word 75 of the Identify Device information.

Sector Count Previous

Sector Number Current

TTAG (bits 7-3) The TTAG field contains the value of the TAG of the outstanding command that is requested to be aborted. The TTAG value is only valid when the Abort Type field is set to 3h (Abort Selected). TTAG does not exceed the value specified in IDENTIFY DEVICE Word 75.

Cylinder Low Current

Cylinder Low Previous

Cylinder High Current

Cylinder High Previous

Device/Head

Input Parameters From The Device

Sector Number (HOB=0)

Sector Number (HOB=1)

Cylinder Low (HOB=0)

Cylinder Low (HOB=1)

Cylinder High (HOB=0)

Cylinder High (HOB=1)

Table 125 Abort Type Field

Abort Type Parameters		
Abort Type	Abort Type	Description
0h	Abort All	The device attempts to abort all outstanding NCQ commands.
1h	Abort Streaming	The device attempts to abort all outstanding NCQ Streaming commands. All non-streaming NCQ commands are unaffected.
2h	Abort Non-Streaming	The device attempts to abort all outstanding NCQ Non-Streaming commands. All NCQ Streaming commands are unaffected.
3h	Abort Selected	The device attempts to abort the outstanding NCQ command associated with the tag represented in TTAG field.

12.17.2 Deadline handling Subcommand (1h)

Table 126 Deadline handling Subcommand (1h)

Command Input

Field	Description
FEATURE	**Bit** **Description** 15:6 Reserved 5 RDNC bit 4 WDNC bit 3:0 Subcommand (1h)
COUNT	**Bit** **Description** 15:14 PRIO field 13:8 Reserved 7:3 NCQ TAG field 2:0 Reserved
LBA	**Bit** **Description** 47:8 Reserved 7:3 TTAG field 2:0 Reserved
DEVICE	**Bit** **Description** 7 Reserved 6 Shall be set to one 5 Reserved 4 Shall be cleared to zero 3:0 Reserved
Command	7:0 63h

Normal Outputs

If this Deadline Handling Subcommand command is supported, the device returns the command completed with no error.

When a Deadline Handling Subcommand command completes successfully, a Set Device Bits FIS is sent to the host to complete the Deadline Handling subcommand. This SDB FIS may also indicate other completed commands.

Error Outputs

The device returns command aborted if:

a) NCQ is disabled and a DEADLINE HANDLING command is issued to the device;
b) The value of the TTAG field equals the value of the TAG field;
c) The value of the TTAG field is an invalid TAG number; or
d) An unsupported Abort type parameter is specified.

Output Parameters To The Device

Feature Current

Subcommand (bits 3-0)	When bits (3:0) is 1h, Deadline Handling Subcommand.
WDNC(bits 4)	If the WDNC (Write Data Not Continue) bit is cleared to zero, then the device allows WRITE FPDMA QUEUED command completion times to exceed what the ICC parameter specified. If the WDNC bit is set to one, then all WRITE FPDMA QUEUED commands are completed by the time specified by the ICC timer value, otherwise the device returns command aborted for all outstanding commands. WDNC is only applicable to WRITE FPDMA QUEUED commands with PRIO is set to 01b (Isochronous – deadline dependent priority)
RDNC(bits 5)	If the RDNC (Read Data Not Continue) bit is cleared to zero, then the device allows READ FPDMA QUEUED command completion times to exceed what the ICC parameter specified. If the RDNC bit is set to one, then all READ FPDMA QUEUED commands are completed by the time specified by the ICC timer value, otherwise the device returns command aborted for all outstanding commands. RDNC is only applicable to READ FPDMA QUEUED commands with PRIO is set to 01b (Isochronous – deadline dependent priority)

Count

TAG (bits 7-3)	The TAG value is assigned to be different from all other queued commands. The value does not exceed the maximum queue depth specified by the Word 75 of the Identify Device information.

Sector Count Previous

Sector Number Current

Cylinder Low Current

Cylinder Low Previous

Cylinder High Current

Cylinder High Previous

Device/Head

Input Parameters From The Device

Sector Number (HOB=0)

Sector Number (HOB=1)

Cylinder Low (HOB=0)

Cylinder Low (HOB=1)

Cylinder High (HOB=0)

Cylinder High (HOB=1)

12.17.3 Set Features Subcommand (5h)

Table 127 SET FEATURES Subcommand (5h)

Command Block Output Registers									
Register		7	6	5	4	3	2	1	0
Data Low		-	-	-	-	-	-	-	-
Data High		-	-	-	-	-	-	-	-
Feature	Current	-	-	V	V	0	1	0	1
	Previous	-	-	-	-	-	-	-	-
Sector Count	Current	V	V	V	V	V	-	-	-
	Previous	-	-	-	-	-	-	-	-
Sector Number	Current	V	V	V	V	V	-	-	-
	Previous	-	-	-	-	-	-	-	-
Cylinder Low	Current	-	-	-	-	-	-	-	-
	Previous	-	-	-	-	-	-	-	-
Cylinder High	Current	-	-	-	-	-	-	-	-
	Previous	-	-	-	-	-	-	-	-
Device/Head		-	1	-	0	-	-	-	-
Command		0	1	1	0	0	0	1	1

Command Block Input Registers									
Register		7	6	5	4	3	2	1	0
Data Low		-	-	-	-	-	-	-	-
Data High		-	-	-	-	-	-	-	-
Error		...See Below...							
Sector Count	HOB=0	-	-	-	-	-	-	-	-
	HOB=1	-	-	-	-	-	-	-	-
Sector Number	HOB=0	-	-	-	-	-	-	-	-
	HOB=1	-	-	-	-	-	-	-	-
Cylinder Low	HOB=0	-	-	-	-	-	-	-	-
	HOB=1	-	-	-	-	-	-	-	-
Cylinder High	HOB=0	-	-	-	-	-	-	-	-
	HOB=1	-	-	-	-	-	-	-	-
Device/Head		-	-	-	-	-	-	-	-
Status		…See Below…							

Error Register							
7	6	5	4	3	2	1	0
CRC	UNC	0	IDN	0	ABT	T0N	AMN
V	V	0	V	0	V	0	0

Status Register							
7	6	5	4	3	2	1	0
BSY	RDY	DF	DSC	DRQ	COR	IDX	ERR
0	V	0	V	-	0	-	V

Normal Outputs

Upon successful completion of one or more outstanding commands, the device shall transmit a Set Device Bits FIS with the Interrupt bit set to one and one or more bits set to one in the ACT field corresponding to the bit position for each command TAG that has completed since the last status notification was transmitted. The ERR bit in the Status register shall be cleared to zero and the value in the Error register shall be zero.

Error Outputs

If the device has received a command that has not yet been acknowledged by clearing the BSY bit to zero and an error is encountered, the device shall transmit a Register Device to Host FIS (see Table 127) with the ERR bit set to one and the BSY bit cleared to zero in the Status field, the ATA error code in the Error field.

Output Parameters To The Device

Feature Current

Subcommand (bits 3-0) When bits(3:0) is 5h, SET FEATURES Subcommand.

Subcommand Specific (bits 7-4)

Feature Previous Contents of SET FEATURES (15:8) field

Sector Count Current

TAG (bits 7-3) The TAG value is assigned to be different from all other queued commands. The value does not exceed the maximum queue depth specified by the Word 75 of the Identify Device information.

Sector Count Previous Contents of SET FEATURES LBA(7:0) field LBA (7:0).

Sector Number Current Contents of SET FEATURES LBA(27:24)

Cylinder Low Current	Contents of SET FEATURES LBA(15:8)
Cylinder Low Previous	
Cylinder High Current	Contents of SET FEATURES LBA(23:16)
Cylinder High Previous	
Device/Head	

Input Parameters From The Device

Sector Number (HOB=0)

Sector Number (HOB=1)

Cylinder Low (HOB=0)

Cylinder Low (HOB=1)

Cylinder High (HOB=0)

Cylinder High (HOB=1)

12.18 NOP (00h)

When processed by a device, this command always returns command completion with an error.

Table 128 NOP Command (00h)

Command Input

Field	Description
FEATURE	Subcommand Code (See Table 129)
COUNT	Value to be returned in the error outputs
LBA	Value to be returned in the error outputs
DEVICE	**Bit** **Description** 7 Obsolete 6 N/A 5 Obsolete 4 Transport Dependent 3:0 Reserved
Command	7:0 00h

Table 129 NOP Subcommand Code

Subcommand	Description	Action
0h	NOP	Return command aborted.
1h – FFh	Obsolete	READ LOG DMA EXT (1h)

Normal Outputs

If the SENSE DATA AVAILABLE bit is set to one, then an additional sense code is available to be returned (see SPC-5).

Error Register

ABT will be set to 1 in the Error Register.

12.19 Open Zone Ext (9Fh/03h)

The Open Zone Ext command requests that one or more Explicitly Open Zone functions be performed.
The Open Zone Ext command is based on the Non-Data ZAC Management command template and is able to use the template's NCQ encapsulation capability.

Table 130 Open Zone Ext Command (9Fh/03h)

Command Input

Field	Description
FEATURE	**Bit** **Description** 15:9 Reserved 8 ALL bit – See Section 12.19.1 7:5 Reserved 4:0 ZM_ACTION field, shall be set to 03h
COUNT	ZONE COUNT field
LBA	ZONE ID field
DEVICE	**Bit** **Description** 7 Obsolete 6 Shall be set to one 5 Obsolete 4 Transport Dependent – See ACS-5 3:0 Reserved
Command	7:0 9Fh

12.19.1 ALL bit

If the ALL bit is:

a) cleared to zero, then a zone range is specified using other command inputs; and
b) set to one, with the ZONE COUNT field:
   a. not cleared to zero, then the device shall return command completion with an error, with the additional sense code set to INVALID FIELD IN CDB (see ACS-5); and
   b. cleared to zero, then:
      i. the ZONE ID field is ignored; and
      ii. all zones on the device are specified as the command inputs.

12.19.2 ZONE COUNT field

The ZONE COUNT field specifies the number of logically contiguous zones that the device is requested to process, starting with the zone specified by the ZONE ID field.
A ZONE COUNT field cleared to zero or set to one specifies a zone range that contains only one zone.

12.19.3 ZONE ID field

The ZONE ID field specifies the lowest LBA of the write pointer zone for which the device is requested to process the command specified by the ZM_ACTION field and the COMMAND field.

12.19.4 Open Zone Ext command processing

If the device has not returned command completion with an error for the Open Zone Ext command, then the device processes the command as shown in the following table.

Table 131 Open Zone Ext command processing

ALL bit	ZONE COUNT field	Description
zero	zero or more	If the specified zone has a Zone Condition of: a) EMPTY, IMPLICITLY OPENED, or CLOSED, then the device shall perform an Explicit Open Zone on the specified zone and b) EXPLICITLY OPENED or FULL, then the device shall make no changes in the Zone Condition and shall return command completion without error.
	two or more	For each zone in the specified zone range that has a Zone Condition of EMPTY, IMPLICITLY OPENED, or CLOSED, the device server shall perform an Explicit Open Zone function.
one	zero	For each zone on the device that has a Zone Condition of CLOSED, the device server shall perform an Explicit Open Zone function.
	non-zero	See Section 12.19.1

Normal Outputs

See Normal Outputs in Section 12.9 Flush Cache (E7h)

Error Outputs

See Error Outputs in Section 12.5 Download Microcode (92h)

12.20 Read Buffer (E4h)

The Read Buffer command transfers a sector of data from the sector buffer of device to the host.
The sector is transferred through the Data Register 16 bits at a time.

The sector transferred will be from the same part of the buffer written to by the last Write Buffer command. The contents of the sector may be different if any reads or writes have occurred since the Write Buffer command was issued.

Table 132 Read Buffer Command (E4h)

Command Input

Field	Description
FEATURE	N/A
COUNT	N/A
LBA	N/A
DEVICE	**Bit** **Description** 7 Obsolete 6 N/A 5 Obsolete 4 Transport Dependent 3:0 Reserved
Command	7:0 E4h

Normal Outputs

See Normal Outputs in Section 12.9 Flush Cache (E7h)

Error Register

See Error Register in 12.5 Download Microcode (92h)

12.21 Read Buffer DMA (E9h)

The Read Buffer DMA command transfers a sector of data from the sector buffer of device to the host.
The sector is transferred through the Data Register 16 bits at a time.

The sector transferred will be from the same part of the buffer written to by the last Write Buffer command. The contents of the sector may be different if any reads or writes have occurred since the Write Buffer command was issued.

Table 133 Read Buffer DMA Command (E9h)

Command Input

Field	Description
FEATURE	N/A
COUNT	N/A
LBA	N/A
DEVICE	**Bit** **Description** 7 Obsolete 6 N/A 5 Obsolete 4 Transport Dependent 3:0 Reserved
Command	7:0 E9h

Normal Outputs

See Normal Outputs in Section 12.9 Flush Cache (E7h)

Error Register

See Error Register in 12.5 Download Microcode (92h)

12.22 Read DMA(C8h/C9h)

The Read DMA command reads one or more sectors of data from disk media, then transfers the data from the device to the host. The sectors are transferred through the Data Register 16 bits at a time. The host initializes a slave-DMA channel prior to issuing the command. The data transfers are qualified by DMARQ and are performed by the slave-DMA channel. The device issues only one interrupt per command to indicate that data transfer has terminated and status is available.
If an uncorrectable error occurs, the read will be terminated at the failing sector.

Table 134 Read DMA Command (C8h/C9h)

Command Input

Field	Description
FEATURE	N/A
COUNT	The number of logical sectors to be transferred. A value of 00h indicates that 256 logical sectors are to be transferred
LBA	LBA of first logical sector to be transferred
DEVICE	**Bit** **Description** 7 Obsolete 6 N/A 5 Obsolete 4 Transport Dependent 3:0 Reserved
Command	7:0 C8h or C9h

Normal Outputs

See Normal Outputs in Section 12.9 Flush Cache (E7h)

Error Outputs

Field	Description
ERROR	**Bit** **Description** 7 INTERFACE CRC bit 6 UNCORRECTABLE ERROR bit 5 Obsolete 4 ID NOT FOUND bit 3 Obsolete 2 ABORT bit 1:0 Obsolete
COUNT	N/A
LBA	LBA of First Unrecoverable Error
DEVICE	**Bit** **Description** 7 Obsolete 6 N/A 5 Obsolete 4 Transport Dependent 3:0 Reserved
STATUS	**Bit** **Description** 7:6 Transport Dependent 5 DEVICE FAULT bit 4 N/A 3 Transport Dependent 2 N/A 1 SENSE DATA AVAILABLE bit 0 ERROR bit

Output Parameters To The Device

Sector Count	The number of continuous sectors to be transferred. If zero is specified, then 256 sectors will be transferred.
Sector Number	This register specifies LBA address bits 0-7 to be transferred.
Cylinder High/Low	This register specifies LBA address bits 8-15 (Low) 16-23 (High) to be transferred.
H	This register specifies LBA bits 24-27 to be transferred.
R	The retry bit, but this bit is ignored.

Input Parameters From The Device

Sector Count	The number of requested sectors not transferred. This will be zero unless an unrecoverable error occurs.
Sector Number	This register contains current LBA bits 0-7.
Cylinder High/Low	This register contains current LBA bits 8-15 (Low), 16-23 (High).
H	This register contains current LBA bits 24-27.

12.23 Read DMA Ext (25h)

The Read DMA command reads one or more sectors of data from disk media, and then transfers the data from the device to the host.
The sectors are transferred through the Data Register 16 bits at a time.
The host initializes a slave-DMA channel prior to issuing the command. The data transfers are qualified by DMARQ and are performed by the slave-DMA channel. The device issues only one interrupt per command to indicate that data transfer has terminated and status is available.
If an uncorrectable error occurs, the read will be terminated at the failing sector.

Table 135 Read DMA Ext Command (25h)

Command Input

Field	Description
FEATURE	Reserved
COUNT	The number of logical sectors to be transferred. A value of 0000h indicates that 65536 logical sectors are to be transferred
LBA	LBA of first logical sector to be transferred
DEVICE	**Bit Description** 7 Obsolete 6 Shall be set to one 5 Obsolete 4 Transport Dependent 3:0 Reserved
Command	7:0 25h

Normal Outputs

See Normal Outputs in Section 12.10 Flush Cache Ext (EAh)

Error Outputs

Field	Description
ERROR	**Bit Description** 7 INTERFACE CRC bit 6 UNCORRECTABLE ERROR bit 5 Obsolete 4 ID NOT FOUND bit 3 Obsolete 2 ABORT bit 1:0 Obsolete
COUNT	Reserved
LBA	LBA of First Unrecoverable Error
DEVICE	**Bit Description** 7 Obsolete 6 N/A 5 Obsolete 4 Transport Dependent 3:0 Reserved
STATUS	**Bit Description** 7:6 Transport Dependent 5 DEVICE FAULT bit 4 N/A 3 Transport Dependent 2 N/A 1 SENSE DATA AVAILABLE bit 0 ERROR bit

Output Parameters To The Device

Sector Count Current	The number of sectors to be transferred low order, bits (7:0).
Sector Count Previous	The number of sectors to be transferred high order, bits (15:8). If 0000h in the Sector Count register is specified, then 65,536 sectors will be transferred.
Sector Number Current	LBA (7:0)
Sector Number Previous	LBA (31:24)
Cylinder Low Current	LBA (15:8)
Cylinder Low Previous	LBA (39:32)
Cylinder High Current	LBA (23:16)
Cylinder High Previous	LBA (47:40)

Input Parameters From The Device

Sector Number (HOB=0)	LBA (7:0) of the address of the first unrecoverable error.
Sector Number (HOB=1)	LBA (31:24) of the address of the first unrecoverable error.
Cylinder Low (HOB=0)	LBA (15:8) of the address of the first unrecoverable error.
Cylinder Low (HOB=1)	LBA (39:32) of the address of the first unrecoverable error.
Cylinder High (HOB=0)	LBA (23:16) of the address of the first unrecoverable error.
Cylinder High (HOB=1)	LBA (47:40) of the address of the first unrecoverable error.

12.24 Read FPDMA Queued (60h)

The Read FPDMA command reads one or more sectors of data from disk media, and then transfers the data from the device to the host.
If an uncorrectable error occurs, the read will be terminated at the failing sector.

Table 136 Read FPDMA Queued Command (60h)

Command Input

Field	Description
FEATURE	The number of logical sectors to be transferred. A value of 0000h indicates that 65536 logical sectors are to be transferred
COUNT	**Bit** **Description** 15:14 PRIO field 13:8 Reserved 7:3 NCQ TAG field 2:0 Reserved
LBA	LBA of first logical sector to be transferred
ICC	7:0 ICC field
DEVICE	**Bit** **Description** 7 FUA bit 6 Shall be set to one 5 Reserved 4 Shall be cleared to zero 3:0 Reserved
Command	7:0 60h

PRIO field
The Priority (PRIO) value shall be assigned by the host based on the priority of the command issued. The device makes a best effort to complete High priority requests in a more timely fashion than Normal and isochronous priority requests. The device tries to complete isochronous requests prior to its associated deadline. The Priority values are defined as follows:

00b Normal priority
01b Isochronous – deadline dependent priority
10b High priority

NCQ TAG field
The TAG value shall be assigned to be different from all other queued commands. The value shall not exceed the maximum queue depth specified by the Word 75 of the Identify Device information.

FUA bit
When the FUA bit is set to 1, the requested data is always retrieved from the media regardless of whether the data are held in the sector buffer or not.
When the FUA bit is set to 0, the data may be retrieved from the media or from the cached data left by previously processed Read or Write commands.

ICC field
The Isochronous Command Completion (ICC) field is valid when PRIO is set to a value of 01b. It is assigned by the host based on the intended deadline associated with the command issued. When a deadline has expired, the device continues to complete the command as soon as possible. The host can modify this behavior if the device supports the NCQ Non-Data command (see Section 12.17) and supports the Deadline Handling subcommand (see Section 12.17.2). This subcommand allows the host to set whether the device aborts commands that have exceeded the time set in ICC.
There are several parameters encoded in the ICC field: Fine or Coarse timing, Interval, and the Max Time. The Interval indicates the time units of the Time Limit parameter.
If ICC Bit 7 cleared to zero, then the time interval is fine-grained.

Interval = 10msec

Time Limit = (ICC[6:0] + 1) * 10 msec

If ICC Bit 7 is set to one (coarse encoding), then the time interval is coarse grained.

Interval = 0.5 sec

Time Limit = (ICC[6:0] + 1) * 0.5 sec

Normal Outputs

Field	Description
ERROR	Shall be cleared to zero
COUNT	N/A
LBA	N/A
DEVICE	**Bit** **Description** 7:4 N/A 3:0 Reserved
STATUS	**Bit** **Description** 7:6 Transport Dependent 5 STREAM ERROR bit 4 N/A 3 Transport Dependent 2 N/A 1 SENSE DATA AVAILABLE bit 0 ERROR bit

Error Outputs

Field	Description
ERROR	**Bit** **Description** 7 INTERFACE CRC bit 6:3 N/A 2 ABORT bit 1:0 N/A
COUNT	N/A
LBA	N/A
DEVICE	**Bit** **Description** 7:4 N/A 3:0 Reserved
STATUS	**Bit** **Description** 7:6 Transport Dependent 5 DEVICE FAULT bit 4 N/A 3 Transport Dependent 2 N/A 1 SENSE DATA AVAILABLE bit 0 ERROR bit

12.25 Read Log Ext (2Fh)

This command returns the specified log to the host. The device shall interrupt for each DRQ block transferred.

Table 137 Read Log Ext Command (2Fh)

Command Input

Field	Description
FEATURE	If not defined by the log specified by the LOG ADDRESS field, this field is reserved.
COUNT	LOG PAGE COUNT field
LBA	**Bit** **Description** 47:40 Reserved 39:32 PAGE NUMBER field (15:8) 31:16 Reserved 15:8 PAGE NUMBER field (7:0) 7:0 LOG ADDRESS field
DEVICE	**Bit** **Description** 7 Obsolete 6 N/A 5 Obsolete 4 Transport Dependent 3:0 Reserved
Command	7:0 2Fh

Normal Outputs

See Normal Outputs in Section 12.10 Flush Cache Ext (EAh)

Error Outputs

Field	Description
ERROR	**Bit** **Description** 7 INTERFACE CRC bit 6 UNCORRECTABLE ERROR bit 5 Obsolete 4 ID NOT FOUND bit 3 Obsolete 2 ABORT bit 1:0 Obsolete
COUNT	Reserved
LBA	Reserved
DEVICE	**Bit** **Description** 7 Obsolete 6 N/A 5 Obsolete 4 Transport Dependent 3:0 Reserved
STATUS	**Bit** **Description** 7:6 Transport Dependent 5 DEVICE FAULT bit 4 N/A 3 Transport Dependent 2 N/A 1 SENSE DATA AVAILABLE bit 0 ERROR bit

Table 138 Log Address Definition

Log address	Content	Feature set	Type
00h	Log directory	N/A	Read Only
03h	Extended Comprehensive SMART error log	SMART error logging	Read Only
04h	Device Statistics log	N/A	Read Only
06h	SMART Self-Test log	SMART self-test	See Note
07h	Extended SMART self-test log	SMART self-test	Read Only
08h	Power Conditions log	Extended Power Condition	Read Only
0Ch	Pending Defects log	none	Read Only
10h	Command Error log	Native Command Queuing	Read Only
11h	Phy Event Counters log	Serial ATA	Read Only
12h	NCQ Non-Data log	Native Command Queuing	Read Only
13h	NCQ Send and Receive log	Native Command Queuing	Read Only
15h	Rebuild Assist log	Rebuild Assist	Read/Write
21h	Write Stream Error log	Streaming	Read Only
22h	Read Stream Error log	Streaming	Read Only
24h	Current Device Internal Status Data log	none	Read Only
25h	Saved Device Internal Status Data log	none	Read Only
2Fh	Sector Configuration log	N/A	Read Only
30h	Identify Device Data log	N/A	Read Only
80h-9Fh	Host vendor specific	SMART	Read/Write
D9h	NAND Information log	None	Read Only

Note: If log address 06h is accessed using the Read Log Ext or Write Log Ext commands, command abort shall be returned.

The Extended SMART self-test log sector shall support 48-bit and 28-bit addressing. All 28-bit entries contained in the SMART self-test log sector shall also be included in the Comprehensive SMART self-test log sector with the 48-bit entries.
If the feature set associated with the log specified in the Sector Number register is not supported or enabled, or if the values in the Sector Count, Sector Number or Cylinder Low registers are invalid, the device shall return command aborted.

12.25.1 General Purpose Log Directory (log page 00h)

The 512 bytes that make up the General Purpose Log Directory are defined in the following table.

Table 139 General Purpose Log Directory

Description	Bytes	Offset
General Purpose Logging Version	2	00h
Number of sectors in the log at log address 01h (7:0)	1	02h
Number of sectors in the log at log address 01h (15:8)	1	03h
Number of sectors in the log at log address 02h (7:0)	1	04h
Number of sectors in the log at log address 02h (15:8)	1	05h
...		
Number of sectors in the log at log address 20h (7:0)	1	40h
Number of sectors in the log at log address 20h (15:8)	1	41h
Number of sectors in the log at log address 21h (7:0)	1	42h
Number of sectors in the log at log address 21h (15:8)	1	43h
Number of sectors in the log at log address 22h (7:0)	1	44h
Number of sectors in the log at log address 22h (15:8)	1	45h
...		
Number of sectors in the log at log address 80h (7:0)	1	100h
Number of sectors in the log at log address 80h (15:8)	1	101h
...		
Number of sectors in the log at log address FFh (7:0)	1	1FEh
Number of sectors in the log at log address FFh (15:8)	1	1FFh
	512	

The value of the General Purpose Logging Version word shall be 0001h. A value of 0000h indicates that there is no General Purpose Log Directory.

The logs at log addresses 80-9Fh shall each be defined as 16 sectors long.

12.25.2 Extended Comprehensive SMART Error log (log page 03h)

The format of each of the sectors that comprise the Extended Comprehensive SMART error log is defined in the following table. Error log data structure shall not include errors attributed to the receipt of faulty commands such as command codes not implemented by the device or requests with invalid parameters or in valid addresses.

Table 140 Extended Comprehensive SMART Error Log

Description	Bytes	Offset
SMART error log version	1	00h
Reserved	1	01h
Error log index (7:0)	1	02h
Error log index (15:8)	1	03h
1st error log data structure	124	04h
2nd error log data structure	124	80h
3rd error log data structure	124	FCh
4th error log data structure	124	178h
Device error count	2	1F4h
Reserved	9	1F6h
Data structure checksum	1	1FFh
	512	

12.25.2.1 Error log version

The value of this version shall be 01h.

12.25.2.2 Error log index

This indicates the error log data structure representing the most recent error. If there have been no error log entries, it is cleared to 0. Valid values for the error log index are 0 to 4.

12.25.2.3 Extended Error log data structure

An error log data structure shall be presented for each of the last four errors reported by the device. These error log data structure entries are viewed as a circular buffer. The fifth error shall create an error log structure that replaces the first error log data structure. The next error after that shall create an error log data structure that replaces the second error log structure, etc... Unused error log data structures shall be filled with zeros.
Data format of each error log structure is shown below.

Table 141 Extended Error log data structure

Description	Bytes	Offset
1st command data structure	18	00h
2nd command data structure	18	12h
3rd command data structure	18	24h
4th command data structure	18	36h
5th command data structure	18	48h
Error data structure	34	5Ah
	124	

Command data structure: Data format of each command data structure is shown below.

Table 142 Command data structure

Description	Bytes	Offset
Device Control register	1	00h
Features register (7:0) (see Note)	1	01h
Features register (15:8)	1	02h
Sector count register (7:0)	1	03h
Sector count register (15:8)	1	04h
Sector number register (7:0)	1	05h
Sector number register (15:8)	1	06h
Cylinder Low register (7:0)	1	07h
Cylinder Low register (15:8)	1	08h
Cylinder High register (7:0)	1	09h
Cylinder High register (15:8)	1	0Ah
Device/Head register	1	0Bh
Command register	1	0Ch
Reserved	1	0Dh
Timestamp (milliseconds from Power-on)	4	0Eh
	18	

Note: bits (7:0) refer to the most recently written contents of the register. Bits (15:8) refer to the contents of the register prior to the most recent write to the register.

Error data structure: Data format of error data structure is shown below.

Table 143 Error data structure

Description	Bytes	Offset
Reserved	1	00h
Error register	1	01h
Sector count register (7:0) (see Note)	1	02h
Sector count register (15:8) (see Note)	1	03h
Sector number register (7:0)	1	04h
Sector number register (15:8)	1	05h
Cylinder Low register (7:0)	1	06h
Cylinder Low register (15:8)	1	07h
Cylinder High register (7:0)	1	08h
Cylinder High register (15:8)	1	09h
Device/Head register	1	0Ah
Status register	1	0Bh
Extended error data (vendor specific)	19	0Ch
State	1	1Fh
Life timestamp (hours)	2	20h
	34	

Note: bits (7:0) refer to the contents if the register is read with bit 7 of the Device Control register cleared to zero. Bits (15:8) refer to the contents if the register is read with bit 7 of the Device Control register set to one.

State shall contain a value indicating the state of the device when the command was issued to the device or the reset occurred as described below.

Value	State
x0h	Unknown
x1h	Sleep
x2h	Standby (If the EPC feature set is enabled, Standby is standby_y or standby_z)
x3h	Active/Idle (If the EPC feature set is enabled, Active/Idle is idle_a or idle_b or idle_c)
x4h	SMART Off-line or Self-test
x5h-xAh	Reserved
xBh-xFh	Vendor specific

Note: The value of x is vendor specific.

12.25.2.4 Device error count

This field shall contain the total number of errors attributable to the device that have been reported by the device during the life of the device. This count shall not include errors attributed to the receipt of faulty commands such as commands codes not implemented by the device or requests with invalid parameters or invalid addresses. If the maximum value for this field is reached the count shall remain at the maximum value when additional errors are encountered and logged.

12.25.3 Device Statistics log (log page 04h)

The Device Statistics log contains selected statistics about the device.
The number of log pages may be greater than one.
The following table is a list of defined log pages. Each supported log page consists of a header field that may be followed by defined statistics fields. If the Revision Number field in the log page header is 0000h, then that log page is not supported. All log page data following the last defined statistic for that log page is reserved. If an unsupported log page is requested, then 512 bytes of all zeros are returned for that log page.

Table 144 Defined Device Statistics log pages

Description	Log page
List of supported log pages (See Table 145)	00h
General Statistics (See Table 146)	01h
Free Fall Statistics (Not Support)	02h
Rotating Media Statistics (See Table 147)	03h
General Errors Statistics (See Table 148)	04h
Temperature Statistics (See Table 149 & Table 150)	05h
Transport Statistics (See Table 151)	06h
Solid State Device Statistics (Not Support)	07h
Zoned Device Statistics (See Table 152)	08h
Reserved	09h..FFh

12.25.3.1 List of Supported Device Statistics log pages (log page 00h)

The List of Supported Device Statistics log pages contains a list of the supported device statistics log pages. Entries are in order of ascending log page number. Every log page for which there is at least one supported statistic is listed.

Table 145 List of supported Device Statistics log pages

Description		Bytes	Offset
Device Statistics Information Header. This device statistics log page lists the number of the supported device statistics log pages.		8	00h
Bit	Description		
63:24	Reserved		
23:16	Log page number. (00h)		
15:0	Revision number. (0001h)		
Number of entries (n) in the following list		1	08h
Log page number of first supported device statistics log page (00h)		1	09h
Log page number of second supported device statistics log page		1	0Ah
…			
Log page number of nth supported device statistics log page		1	n+08h
Reserved			n+09h..1FFh

12.25.3.2 General Statistics (log page 01h)

The General Statistics log page contains general information about the device.

Table 146 General Statistics

Description		Bytes	Offset
Device Statistics Information Header		8	00h
Bit	Description		
63:24	Reserved		
23:16	Log page number. (01h)		
15:0	Revision number. (0002h)		
Lifetime Power-On Resets		8	08h
Bit	Description		
63:56	Device Statistics Flags		
55:32	Reserved		
31:0	Number of times that the device has processed a Power-On Reset event (DWord)		
Power-on Hours		8	10h
Bit	Description		
63:32	Reserved		
31:0	Power-on Hours (DWord)		
Logical Sectors Written		8	18h
Bit	Description		
63:56	Device Statistics Flags		
55:48	Reserved		
47:0	Logical Sectors Written		
Number of Write Commands		8	20h
Bit	Description		
63:56	Device Statistics Flags		
55:48	Reserved		
47:0	Number of Write Commands		
Logical Sectors Read		8	28h
Bit	Description		
63:56	Device Statistics Flags		
55:48	Reserved		
47:0	Logical Sectors Read		
Number of Read Commands		8	30h
Bit	Description		
63:56	Device Statistics Flags		
55:48	Reserved		
47:0	Number of Read Commands		
Date and Time TimeStamp		8	38h
Bit	Description		
63:56	Device Statistics Flags		
55:48	Reserved		
47:0	Date and Time TimeStamp		
Reserved		1	40h..1FFh

12.25.3.3 Rotating Media Statistics (log page 03h)

The Rotating Media Statics log page contains device rotating media information

Table 147 Rotating Media Statistics

Description		Bytes	Offset
Device Statistics Information Header		8	00h
Bit	Description		
63:24	Reserved		
23:16	Log page number. (03h)		
15:0	Revision number. (0001h)		
Spindle Motor Power-on Hours		8	08h
Bit	Description		
63:56	Device Statistics Flags		
55:32	Reserved		
31:0	Spindle Motor Power-on Hours (DWord)		
Head Flying Hours		8	10h
Bit	Description		
63:56	Device Statistics Flags		
55:32	Reserved		
31:0	Head Flying Hours (DWord)		
Head Load Events		8	18h
Bit	Description		
63:56	Device Statistics Flags		
55:32	Reserved		
31:0	Head Load Events (DWord)		
Number of Reallocated Logical Sectors		8	20h
Bit	Description		
63:56	Device Statistics Flags		
55:32	Reserved		
31:0	Number of Reallocated Logical Sectors (DWord)		
Read Recovery Attempts		8	28h
Bit	Description		
63:56	Device Statistics Flags		
55:32	Reserved		
31:0	Read Recovery Attempts (DWord)		
Number of Mechanical Start Failures		8	30h
Bit	Description		
63:56	Device Statistics Flags		
55:32	Reserved		
31:0	Number of Mechanical Start Failures (DWord)		
Reserved		1	38h..1FFh

12.25.3.4 General Errors Statistics (log page 04h)

General Errors Statistics log page contains general error information about the device

Table 148 General Error Statistics

Description		Bytes	Offset
Device Statistics Information Header		8	00h
Bit	Description		
63:24	Reserved		
23:16	Log page number. (04h)		
15:0	Revision number. (0001h)		
Number of Reported Uncorrectable Errors		8	08h
Bit	Description		
63:56	Device Statistics Flags		
55:32	Reserved		
31:0	Number of Reported Uncorrectable Errors (DWord)		
Number of Resets Between Command Acceptance and Command Completion		8	10h
Bit	Description		
63:56	Device Statistics Flags		
55:32	Reserved		
31:0	Number of Resets Between Command Acceptance and Command Completion (DWord)		
Physical Element Status Changed		8	18h
Bit	Description		
63:56	Device Statistics Flags		
55:32	Reserved		
31:0	Physical Element Status Changed (DWord)		
Reserved		1	20h..1FFh

12.25.3.5 Temperature Statistics (log page 05h)

The Temperature Statistics log page contains general information about the device. The value in the temperature field is a two's complement integer in degrees Celsius.

Table 149 Temperature Statistics (part 1 of 2)

Description		Bytes	Offset
Device Statistics Information Header		8	00h
Bit	Description		
63:24	Reserved		
23:16	Log page number. (05h)		
15:0	Revision number. (0001h)		
Current Temperature		8	08h
Bit	Description		
63:56	Device Statistics Flags		
55:8	Reserved		
7:0	Current Temperature (signed byte)		
Average Short Term Temperature		8	10h
Bit	Description		
63:56	Device Statistics Flags		
55:8	Reserved		
7:0	Average Short Term Temperature (signed byte)		
Average Long Term Temperature		8	18h
Bit	Description		
63:56	Device Statistics Flags		
55:8	Reserved		
7:0	Average Long Term Temperature (signed byte)		

Table 150 Temperature Statistics (part 2 of 2)

Highest Temperature			
Bit	Description		
63:56	Device Statistics Flags	8	20h
55:8	Reserved		
7:0	Highest Temperature (signed byte)		
Lowest Temperature			
Bit	Description		
63:56	Device Statistics Flags	8	28h
55:8	Reserved		
7:0	Lowest Temperature (signed byte)		
Highest Average Short Term Temperature			
Bit	Description		
63:56	Device Statistics Flags	8	30h
55:8	Reserved		
7:0	Highest Average Short Term Temperature (signed byte)		
Lowest Average Short Term Temperature			
Bit	Description		
63:56	Device Statistics Flags	8	38h
55:8	Reserved		
7:0	Lowest Average Short Term Temperature (signed byte)		
Highest Average Long Term Temperature			
Bit	Description		
63:56	Device Statistics Flags	8	40h
55:8	Reserved		
7:0	Highest Average Long Term Temperature (signed byte)		
Lowest Average Long Term Temperature			
Bit	Description		
63:56	Device Statistics Flags	8	48h
55:8	Reserved		
7:0	Lowest Average Long Term Temperature (signed byte)		
Time in Over-Temperature			
Bit	Description		
63:56	Device Statistics Flags	8	50h
55:32	Reserved		
31:0	Time in Over-Temperature (DWord)		
Specified Maximum Operating Temperature			
Bit	Description		
63:56	Device Statistics Flags	8	58h
55:8	Reserved		
7:0	Specified Maximum Operating Temperature (signed byte)		
Time in Under-Temperature			
Bit	Description		
63:56	Device Statistics Flags	8	60h
55:32	Reserved		
31:0	Time in Under-Temperature (DWord)		
Specified Minimum Operating Temperature			
Bit	Description		
63:56	Device Statistics Flags	8	68h
55:8	Reserved		
7:0	Specified Minimum Operating Temperature (signed byte)		
Reserved		1	70h..1FFh

12.25.3.6 Transport Statistics (log page 06h)

The Transport Statistics log page contains interface transport information about the device.

Table 151 Transport Statistics

Description		Bytes	Offset
Device Statistics Information Header		8	00h
Bit	Description		
63:24	Reserved		
23:16	Log page number. (06h)		
15:0	Revision number. (0001h)		
Number of hardware resets		8	08h
Bit	Description		
63:56	Device Statistics Flags		
55:32	Reserved		
31:0	Number of hardware resets (DWord)		
Number of ASR Events		8	10h
Bit	Description		
63:56	Device Statistics Flags		
55:32	Reserved		
31:0	Number of ASR Events (DWord)		
Head Load Events		8	18h
Bit	Description		
63:56	Device Statistics Flags		
55:32	Reserved		
31:0	Head Load Events (DWord)		
Number of Interface CRC Errors		8	20h
Bit	Description		
63:56	Device Statistics Flags		
55:32	Reserved		
31:0	Number of Interface CRC Errors (DWord)		
Reserved		1	28h..1FFh

12.25.3.7 Zoned Device Statistics (log page 08h)

The Zoned Device Statistics page contains information as described in Table 152.

The Zoned Device statistics are as follows:

a) Device Statistics Information Header
b) Maximum Open Zones
c) Maximum Explicitly Open Zones
d) Maximum Implicitly Open Zones
e) Minimum Empty Zones
f) Zones Emptied
g) Failed Explicit Opens
h) Read Rule Violations
i) Write Rule Violations

Table 152 Zoned Device Statistics

Offset		Type	Description
0..7		QWord	Device Statistics Information Header
			Bit **Meaning** 63:24 Reserved 23:16 LOG PAGE NUMBER field - shall be set to 08h 15:0 REVISION NUMBER field (Word) - shall be set to 0001h
8..15		QWord	Maximum Open Zones
			Bit **Meaning** 63:56 DEVICE STATISTICS FLAGS field (see ACS-5) 55:32 Reserved 31:0 MAX OPEN ZONES field (DWord)
15..23		QWord	Maximum Explicitly Open Zones
			Bit **Meaning** 63:56 DEVICE STATISTICS FLAGS field (see ACS-5) 55:32 Reserved 31:0 MAX OPEN ZONES field (DWord)
24..31		QWord	Maximum Implicitly Open Zones
			Bit **Meaning** 63:56 DEVICE STATISTICS FLAGS field (see ACS-5) 55:32 Reserved 31:0 MAX IMPLICITLY OPEN ZONES field (DWord)
32..39		QWord	Minimum Empty Zones
			Bit **Meaning** 63:56 DEVICE STATISTICS FLAGS field (see ACS-5) 55:32 Reserved 31:0 MIN EMPTY ZONES field (DWord)
40..47		QWord	Maximum Non-Sequential Zones
			Bit **Meaning** 63:56 DEVICE STATISTICS FLAGS field (see ACS-5) 55:32 Reserved 31:0 MAX NON SEQUENTIAL ZONES field (DWord)
48..55		QWord	Zones Emptied
			Bit **Meaning** 63:56 DEVICE STATISTICS FLAGS field (see ACS-5) 55:32 Reserved 31:0 ZONES EMPTIED field (DWord)
56..63		QWord	Suboptimal Write Commands
			Bit **Meaning** 63:56 DEVICE STATISTICS FLAGS field (see ACS-5) 55:32 Reserved 31:0 SUBOPTIMAL WRITE CMDS field (DWord)
64..71		QWord	Commands Exceeding Optimal Limit
			Bit **Meaning** 63:56 DEVICE STATISTICS FLAGS field (see ACS-5) 55:32 Reserved 31:0 CMDS EXCEEDING OPTIMAL LIMIT field (DWord)
72..79		QWord	Failed Explicit Opens
			Bit **Meaning** 63:56 DEVICE STATISTICS FLAGS field (see ACS-5) 55:32 Reserved 31:0 FAILED EXPLICIT OPENS field (DWord)
80..87		QWord	Read rule violations
			Bit **Meaning**

			63:56 DEVICE STATISTICS FLAGS field (see ACS-5) 55:32 Reserved 31:0 READ RULE VIOLATIONS field (DWord)
88..95		QWord	Write rule violations
			Bit **Meaning** 63:56 DEVICE STATISTICS FLAGS field (see ACS-5) 55:32 Reserved 31:0 WRITE RULE VIOLATIONS field (DWord)
96..511		Byte	Reserved

12.25.3.7.1 Device Statistics Information Header

The Device Statistics Information Header indicates the format of the structure for this page (see Table 152).

12.25.3.7.2 MAX OPEN ZONES field

The MAX OPEN ZONES field is the maximum of Sequential Write Required zones that have been concurrently open with a Zone Condition of EXPLICITLY OPEN or IMPLICITLY OPEN since this statistic was last initialized.
The READ THEN INITIALIZE SUPPORTED bit (see ACS-5) for this statistic shall be set to one.

12.25.3.7.2.1 Update Interval

None

12.25.3.7.2.2 Measurement Units

Number of zones as an unsigned integer.

12.25.3.7.2.3 Initialization

This field shall be cleared to zero as a result of processing a power on reset.
If a GPL command with the READ THEN INITIALIZE bit (see ACS-5) set to one reads this statistic, then this field shall be set to the maximum of the current number of Sequential Write Required zones that are open with a Zone Condition of EXPLICITLY OPEN or IMPLICITLY OPEN.

12.25.3.7.3 MAX IMPLICITLY OPEN ZONES field

The MAX IMPLICITLY OPEN ZONES field is the maximum number of the maximum number of Sequential Write Required zones that have been concurrently open with a Zone Condition of IMPLICITLY OPEN since this statistic was last initialized.

The READ THEN INITIALIZE SUPPORTED bit (see ACS-5) for this statistic shall be set to one.

12.25.3.7.3.1 Update Interval

None

12.25.3.7.3.2 Measurement Units

Number of zones as an unsigned integer.

12.25.3.7.3.3 Initialization

This field shall be cleared to zero as a result of processing a power on reset.
If a GPL command with the READ THEN INITIALIZE bit (see ACS-5) set to one reads this statistic, then this field shall be set to the maximum of the current number of Sequential Write Required zones that are open with a Zone Condition of IMPLICITLY OPEN.

12.25.3.7.4 MIN EMPTY ZONES field

The MIN EMPTY ZONES field is the minimum number of zones that have concurrently had a Zone Condition of EMPTY since this statistic was last initialized.
The READ THEN INITIALIZE SUPPORTED bit (see ACS-5) for this statistic shall be set to one.

12.25.3.7.4.1 Update Interval

None

12.25.3.7.4.2 Measurement Units

Number of zones as an unsigned integer.

12.25.3.7.4.3 Initialization

This field shall be cleared to zero:
a) as a result of processing a power on reset; or
b) a GPL command with the READ THEN INITIALIZE bit (see ACS-5) set to one reads this statistic.

12.25.3.7.5 FAILED EXPLICIT OPENS field

The FAILED EXPLICIT OPENS field is the number of OPEN ZONE EXT commands processed that completed with error with the additional sense code set to INSUFFICIENT ZONE RESOURCES since this statistic was last initialized.
The READ THEN INITIALIZE SUPPORTED bit (see ACS-5) for this statistic shall be set to one.

12.25.3.7.5.1 Update Interval

None

12.25.3.7.5.2 Measurement Units

Number of zones as an unsigned integer.

12.25.3.7.5.3 Initialization

This field shall be cleared to zero:
a) as a result of processing a power on reset; or
b) a GPL command with the READ THEN INITIALIZE bit (see ACS-5) set to one reads this statistic.

12.25.3.7.6 READ RULE VIOLATIONS field

The READ RULE VIOLATIONS field is the number of read commands processed that failed with the additional sense code set to:
a) ATTEMPT TO READ INVALID DATA;
b) READ BOUNDARY VIOLATION;
c) ZONE IS OFFLINE;
d) ZONE IS INACTIVE
since this statistic was last initialized.
The READ THEN INITIALIZE SUPPORTED bit (see ACS-5) for this statistic shall be set to one.

12.25.3.7.6.1 Update Interval

None

12.25.3.7.6.2 Measurement Units

Number of commands as an unsigned integer.

12.25.3.7.6.3 Initialization

This field shall be cleared to zero:
a) as a result of processing a power on reset; or
b) a GPL command with the READ THEN INITIALIZE bit (see ACS-5) set to one reads this statistic.

12.25.3.7.7 WRITE RULE VIOLATIONS field

The WRITE RULE VIOLATIONS field is the number of write commands processed that failed:
a) with the additional sense code set to:
A) INSUFFICIENT ZONE RESOURCES;
B) WRITE BOUNDARY VIOLATION,
C) UNALIGNED WRITE COMMAND;
D) ZONE IS OFFLINE;
E) ZONE IS READ ONLY;
F) ZONE IS INACTIVE;
or
b) as the result of attempting to write to a Sequential Write Required zone when the zone condition was FULL, since this statistic was last initialized.
The READ THEN INITIALIZE SUPPORTED bit (see ACS-5) for this statistic shall be set to one.

12.25.3.7.7.1 Update Interval

None

12.25.3.7.7.2 Measurement Units

Number of commands as an unsigned integer.

12.25.3.7.7.3 Initialization

This field shall be cleared to zero:
a) as a result of processing a power on reset; or
b) a GPL command with the READ THEN INITIALIZE bit (see ACS-5) set to one reads this statistic.

12.25.4 Extended SMART Self-test log (log page 07h)

The format of each of the sectors that comprise the Extended SMART Self-test log are defined in the following table. The Extended SMART self-test log sector shall support 48-bit and 28-bit addressing. All 28-bit entries contained in the SMART self-test log, defined in Section 12.61.3.12 shall also be included in the Extended SMART self-test log with all 48-bit entries.

Table 153 Extended Self-test log data structure

Description	Bytes	Offset
Self-test log data structure revision number	1	00h
Reserved	1	01h
Self-test descriptor index (7:0)	1	02h
Self-test descriptor index (15:8)	1	03h
Descriptor entry 1	26	04h
Descriptor entry 2	26	1Eh
...		
Descriptor entry 18	26	1D8h
Vendor specific	2	1F2h
Reserved	11	1F4h
Data structure checksum	1	1FFh
	512	

These descriptor entries are viewed as a circular buffer. The nineteenth self-test shall create a descriptor entry that replaces descriptor entry 1. The next self-test after that shall create a descriptor entry that replaces descriptor entry 2, etc. All unused self-test descriptors shall be filled with zeros.

12.25.4.1 Self-test log data structure revision number

The value of this revision number shall be 01h.

12.25.4.2 Self-test descriptor index

This indicates the most recent self-test descriptor. If there have been no self-tests, this is set to zero. Valid values for the Self-test descriptor index are 0 to 18.

12.25.4.3 Extended Self-test log descriptor entry

Table 154 Extended Self-test log descriptor entry

Description	Bytes	Offset
Self-test number	1	00h
Self-test execution status	1	01h
Power-on life timestamp in hours	2	02h
Self-test failure check point	1	04h
Failing LBA (7:0)	1	05h
Failing LBA (15:8)	1	06h
Failing LBA (23:16)	1	07h
Failing LBA (31:24)	1	08h
Failing LBA (39:32)	1	09h
Failing LBA (47:40)	1	0Ah
Vendor specific	15	0Bh
	26	

12.25.5 Power Conditions log (log page 08h)

Defines the Power Conditions log. If the Extended Power Conditions feature set is not supported, then the Power Conditions log not is supported. Each Power is composed of the following formats.

Table 155 Idle power conditions

Offset	Type	Description
0-63	Byte	Idle_a power conditions descriptor. Power condition supported is set to one to indicate that the idle_a power condition is supported.
64-127	Byte	Idle_b power conditions descriptor. Power condition supported is set to one to indicate that the idle_b power condition is supported.
128-191	Byte	Idle_c power conditions descriptor. Power condition supported is set to one to indicate that the idle_c power condition is supported.
192-511	Byte	Reserved

Table 156 Standby power conditions (log page 01h)

Offset	Type	Description
0-383	Byte	Reserved
384-447	Byte	Standby_y power conditions descriptor. Power condition supported is set to one to indicate that the standby_y power condition is supported.
448-511	Byte	Standby_z power conditions descriptor. Power condition supported is set to one to indicate that the standby_z power condition is supported.

Table 157 Power Conditions log descriptor

Offset	Type	Description
0	Byte	Reserved
1	Byte	Power Condition Flags Bit Description 7 Power Condition Supported The Power Condition Supported bit is valid if the EPC feature set is supported, regardless of whether EPC is enabled or disabled. If the Power Condition Supported bit is set to one, then the power condition is supported. If the Power Condition Supported bit is cleared to zero, then the power condition is not supported. 6 Timer Savable The Timer Savable bit is valid if the Power Condition Supported bit is set to one, regardless of whether EPC is enabled or disabled. If the Timer Savable bit is set to one, then the power condition is savable if EPC is enabled. If the Timer Savable bit is cleared to zero, then the power condition is not savable 5 Timer Changeable The Timer Changeable bit is valid if the Power Condition Supported bit is set to one, regardless of whether EPC is enabled or disabled. If the Timer Changeable bit is set to one, then the power condition is changeable if EPC is enabled. If the Timer Changeable bit is cleared to zero, then the power condition is not changeable 4 Default Timer Enabled The Default Timer Enabled bit is valid if the Power Condition Supported bit is set to one, regardless of whether EPC is enabled or disabled. 3 Saved Timer Enabled The Saved Timer Enabled bit is valid if the Power Condition Supported bit is set to one, regardless of whether EPC is enabled or disabled. 2 Current Timer Enabled If EPC is disabled, then the Current Timer Enabled bit shall be cleared to zero. If EPC is enabled and the Current Timer Setting field is non-zero and the Current Timer Enabled bit is set to one, then the power condition timer is enabled. If EPC is enabled and the Current Timer Enabled bit is cleared to zero, then the power condition timer is disabled 1-0 Reserve
2-3	Byte	Reserved
4-7	DWord	Default Timer setting The Default Timer field is set at the time of manufacture. The Default Timer Setting field is valid if the Power Condition Supported bit is set to one, regardless of whether EPC is enabled or disabled. A value of FFFF_FFFFh indicates that the time is greater than or equal to 429_496_729_500 milliseconds. Measurement Units: 100 milliseconds.
8-11	DWord	Saved Timer setting The Saved Timer Setting field is a value that has been saved by a SET FEATURES Set Power Condition Timer subcommand. The Saved Timer Setting field is valid if the Power Condition Supported bit is set to one, regardless of whether EPC is enabled or disabled. A value of zero indicates that this power condition is disabled if the EPC feature set is enabled. A value of FFFF_FFFFh indicates that the time is greater than or equal to 429_496_729_500 milliseconds. Measurement Units: 100 milliseconds.
12-15	DWord	Current Timer setting The Current Timer setting is the minimum time that the device shall wait after command completion before entering this power condition if the EPC feature set is enabled. The Current Timer Setting field shall be cleared to zero if:

		EPC is disabled; the Power Condition Supported bit is cleared to zero; or the Current Timer Enabled field is cleared to zero. A value of FFFF_FFFFh indicates that the time is greater than or equal to 429_496_729_500 milliseconds. Measurement Units: 100 milliseconds
16-19	DWord	Nominal Recovery time from to PM0:Active power management state The Nominal Recovery time from power to PM0: Active is the nominal time required to transition from power to PM0: Active power management state. This time does not include processing time for the command that caused this transition to occur. A value of zero indicates that the nominal recovery time is not specified. A value of FFFF_FFFFh indicates that the recovery time is greater than or equal to 429 496 729 500 milliseconds. Measurement Units: 100 milliseconds. This value is preserved over all resets.
20-23	DWord	Minimum timer setting The Minimum timer setting is the minimum timer value allowed by the Set Power Condition Timer subcommand for the timer. A value of zero indicates that the minimum timer value is not specified. A value of FFFF_FFFFh indicates that the minimum timer value is greater than or equal to 429 496 729 500 milliseconds. Measurement Units: 100 milliseconds This value be preserved over all resets
24-27	DWord	Maximum timer setting The Maximum timer setting is the maximum timer value allowed by the Set Power Condition Timer subcommand for the timer. A value of zero indicates that the maximum timer value is not specified. A value of FFFF_FFFFh indicates that the maximum timer value is greater than or equal to 429 496 729 500 milliseconds. Measurement Units: 100 milliseconds This value be preserved over all resets
28-63	DWord	Reserved

12.25.6 Pending Defects Log (log page 0Ch)

The Pending Defects log contains an unsorted list of logical sectors for which the device has detected an uncorrectable media error while accessing the media (e.g., processing a command, background activities, and device-initiated processes that are outside the scope of this standard).

Logical sectors that are specified by a Write Uncorrectable Ext (45h) should not be added to the Pending Defects log during the processing of the WRITE UNCORRECTABLE EXT command. A logical sector may be added to the log if it is in the same physical sector as another logical sector that is added to the log.

A logical sector shall be removed from the log if the device writes that logical sector without error; or reads that logical sector without error. The commands of the Sanitize Device Feature set remove all descriptors from the Pending Defects log. A logical sector may be removed from the log if it is in the same physical sector as another logical sector that is removed from the log.

12.25.6.1 Contents of the Pending Defects log

The size of the log may change as a result of a power on reset or activating new firmware (e.g., DOWNLOAD MICROCODE command). Table 158 defines the format of the Pending Defects log for page 0. Table 159 defines the format of all subsequent pages of the log. The size (i.e., number of pages) of the Pending Defects log is indicated in the Section 12.25.1.

Table 158 Pending Defects log (page 0)

Offset	Type	Description
0..3	DWord	Number of Log Descriptors field
4..15		Reserved
16..31	Bytes	Pending Defects Log descriptor 0
32..47	Bytes	Pending Defects Log descriptor 1
…		…
496..511	**Bytes**	Pending Defects Log descriptor 30

Table 159 Pending Defects log (page 1..n)

Offset	Type	Description
0..15	Bytes	Pending Defects Log descriptor 31 + ((log page number–1) x 32)
16..31	Bytes	Pending Defects Log descriptor 32 + ((log page number–1) x 32)
…		…
496..511	Bytes	Pending Defects Log descriptor 62 + ((log page number–1) x 32)

12.25.6.2 Number of Log Descriptors field

The NUMBER OF LOG DESCRIPTORS field indicates the number of Pending Defects descriptors in the Pending Defects log. If the value of the NUMBER OF LOG DESCRIPTORS field is greater than or equal to FFFEh, the device shall not add more Pending Defects descriptors to the log and the NUMBER OF LOG DESCRIPTORS field shall not be changed.

There shall be no unused Pending Defects descriptors (see Section 12.25.6.3) included in the range specified by the NUMBER OF LOG DESCRIPTORS field. The number of Pending Defects descriptors in the Pending Defects log is vendor specific.

12.25.6.3 Pending Defects descriptor format

Each Pending Defects descriptor indicates a logical sector that is associated with an uncorrectable media error. Unused Pending Defects descriptors shall be cleared to zero. The format of each Pending Defects descriptor is shown in the following table.

Table 160 Pending Defects descriptor format

Offset	Type	Description
0..3	DWord	POWER ON HOURS field
4..7	Bytes	Reserved
8..15	QWord	LBA field

At the time that a Pending Defects descriptor is created, the device shall set the POWER ON HOURS field to the current value of the Power On Hours device statistic if the Power On Hours device statistic is supported and is valid; and Power On Hours filed will be filled with FFFF_FFFFh if the Power On Hours device statistic is not supported or is not valid.

The LBA field indicates the LBA that is associated with an uncorrectable media error.

12.25.7 NCQ Command Error log (log page 10h)

The format of the Command Error data structure:

Table 161 Command Error log

Byte	7	6	5	4	3	2	1	0
0	NQ	UNL	DE	NCQ TAG				
1	Reserved							
2	Status							
3	Error							
4	LBA field(7:0)							
5	LBA field(15:8)							
6	LBA field(23:16)							
7	DEVICE field							
8	LBA field(31:24)							
9	LBA field(39:32)							
10	LBA field(47:40)							
11	Reserved							
12	COUNT field(7:0)							
13	COUNT field(15:8)							
14	Sense Key							
15	ADDITIONAL SENSE CODE field							
16	ADDITIONAL SENSE CODE QUALIFIER filed							
17	Final LBA In Error(7:0)							
18	Final LBA In Error(15:8)							
19	Final LBA In Error(23:16)							
20	Final LBA In Error(31:24)							
21	Final LBA In Error(39:32)							
22	Final LBA In Error(47:40)							
23..255	Reserved							
256 – 510	Vendor Unique							
511	Data Structure Checksum							

The TAG field (Byte 0 Bits 4-0) contains the tag number corresponding to a queued command if the NQ bit is cleared.
The DE (DEFERRED ERROR, Byte 0 Bit 5) field indicates that the sense data is current information (=0) or deferred error (=1).
The NQ field (Byte 0 Bit 7) indicates whether the error condition was a result of a non-queued or not. If it is cleared the error information corresponds to a queued command specified by the tag number indicated in the TAG field.
The bytes 1 to 13 correspond to the contents of Shadow Register Block when the error was reported.
The Data Structure Checksum (Byte 511) contains the 2's complement of the sum of the first 511 bytes in the data structure. The sum of all 512 bytes of the data structure will be zero when the checksum is correct.

12.25.8 Phy Event Counters log (log page 11h)

See Section 10.15.3 for a description of the Phy Event Counters feature

READ LOG EXT log page 11h is one page (512 bytes) in length. The first Dword of the log page contains information that applies to the rest of the log page. Software should continue to process counters until a counter identifier with value 0h is found or the entire page has been read. A counter identifier with value 0h indicates that the log page contains no more counter values past that point.

Table 162 READ LOG EXT Log Page 11h data structure definition

Byte	7	6	5	4	3	2	1	0
0	Reserved							
1	Reserved							
2	Reserved							
3	Reserved							
…	…							
n	Counter n Identifier							
n+1								
n+2	Counter n Value							
n + Counter n Length								
…	…							
508	Reserved							
509								
510								
511	Data Structure Checksum							

Counter n Identifier

Phy event counter identifier that corresponds to Counter n Value. Specifies the particular event counter that is being reported. The Identifier is 16 bits in length.
Valid identifiers are listed in.

Counter n Value

Value of the Phy event counter that corresponds to Counter n Identifier. The number of significant bits is determined by Counter n Identifier bits 14:12 (as defined in Section 12.25.8.2). The length of Counter n Value shall always be a multiple of 16-bits. All counters are one-extended. For example, if a counter is only physically implemented as 8-bits when it reaches the maximum value of 0xFF, it shall be one-extended to 0xFFFF. The counter shall stop (and not wrap to zero) after reaching its maximum value.

Counter n Length

Size of the Phy event counter as defined by bits 14:12 of Counter n Identifier.
The size of the Phy event counter shall be a multiple of 16-bits.

Data Structure Checksum

The data structure checksum is the 2's complement of the sum of the first 511 bytes in the data structure. Each byte shall be added with unsigned arithmetic and overflow shall be ignored. The sum of all 512 bytes of the data structure will be zero when the checksum is correct.

Reserved All reserved fields shall be cleared to zero

12.25.8.1 Counter Reset Mechanisms

There are two mechanisms by which the host can explicitly cause the Phy counters to be reset. The first mechanism is to issue a BIST Activate FIS to the device. Upon reception of a BIST Activate FIS the device shall reset all Phy event counters to their reset value. The second mechanism uses the READ LOG EXT command. When the device receives a READ LOG EXT command for log page 11h and bit 0 in the Features register is set to one, the device shall return the current counter values for the command and then reset all Phy event counter values.

12.25.8.2 Counter Identifiers

Each counter begins with a 16-bit identifier. Table 163 defines the counter value for each identifier. Any unused counter slots in the log page should have a counter identifier value of 0h.
Optional counters that are not implemented shall not be returned in log page 11h. A value of '0' returned for a counter means that there have been no instances of that particular event. There is no required ordering for event counters within the log page; the order is arbitrary and selected by the device vendor.
For all counter descriptions, 'transmitted' refers to items sent by the device to the host and 'received' refers to items received by the device from the host.
Bits 14:12 of the counter identifier convey the number of significant bits that counter uses. All counter values consume a multiple of 16-bits. The valid values for bits 14:12 and the corresponding counter sizes are:

1h 16-bit counter

2h 32-bit counter

3h 48-bit counter

4h 64-bit counter

Any counter that has an identifier with bit 15 set to one is vendor specific. This creates a vendor specific range of counter identifiers from 8000h to FFFFh. Vendor specific counters shall observe the number of significant bits 14:12 as defined above.

Table 163 Phy Event Counter Identifiers

Identifier (Bits 11:0)	Mandatory/ Optional	Supported/ Not Supported	Description
000h	Mandatory	Supported	No counter value; marks end of counters in the page
001h	Mandatory	Supported	Command failed and ICRC bit set to one in Error register
002h	Optional	Supported	R_ERR response for Data FIS
003h	Optional	Supported	R_ERR response for Device-to-Host Data FIS
004h	Optional	Supported	R_ERR response for Host-to-Device Data FIS
005h	Optional	Supported	R_ERR response for Non-data FIS
006h	Optional	Supported	R_ERR response for Device-to-Host Non-data FIS
007h	Optional	Supported	R_ERR response for Host-to-Device Non-data FIS
008h	Optional	Not Supported	Device-to-Host non-Data FIS retries
009h	Optional	Supported	Transitions from drive PhyRdy to drive PhyNRdy
00Ah	Mandatory	Supported	Signature Device-to-Host Register FISes sent due to a COMRESET
00Bh	Optional	Supported	CRC errors within a Host-to-Device FIS
00Dh	Optional	Supported	Non-CRC errors within a Host-to-Device FIS
00Fh	Optional	Not Supported	Not supported (R_ERR response for Host-to-Device Data FIS due to CRC errors)
010h	Optional	Not Supported	R_ERR response for Host-to-Device Data FIS due to non-CRC errors
012h	Optional	Not Supported	R_ERR response for Host-to-Device Non-data FIS due to CRC errors
013h	Optional	Not Supported	R_ERR response for Host-to-Device Non-data FIS due to non-CRC errors

12.25.8.2.1 Counter Definitions

The counter definitions in this section specify the events that a particular counter identifier represents.

12.25.8.2.2 Identifier 000h

There is no counter associated with identifier 000h. A counter identifier of 000h indicates that there are no additional counters in the log page.

12.25.8.2.3 Identifier 001h

The counter with identifier 001h returns the number of commands that returned an ending status with the ERR bit set to one in the Status register and the ICRC bit set to one in the Error register.

12.25.8.2.4 Identifier 002h

The counter with identifier 002h returns the sum of (the number of transmitted Device-to-Host Data FISes to which the host responded with R_ERRP) and (the number of received Host-to-Device Data FISes to which the device responded with R_ERRP).

12.25.8.2.5 Identifier 003h

The counter with identifier 003h returns the number of transmitted Device-to-Host Data FISes to which the host responded with R_ERRP.

12.25.8.2.6 Identifier 004h

The counter with identifier 004h returns the number of received Host-to-Device Data FISes to which the device responded with R_ERRP. The count returned for identifier 004h is not required to be equal to the sum of the counters with identifiers 00Fh and 010h.

12.25.8.2.7 Identifier 005h

The counter with identifier 005h returns the sum of (the number of transmitted Device-to-Host non-Data FISes to which the host responded with R_ERRP) and (the number of received Host-to-Device non-Data FISes to which the device responded with R_ERRP). Retries of non-Data FISes are included in this count.

12.25.8.2.8 Identifier 006h

The counter with identifier 006h returns the number of transmitted Device-to-Host non-Data FISes to which the host responded with R_ERRP. Retries of non-Data FISes are included in this count.

12.25.8.2.9 Identifier 007h

The counter with identifier 007h returns the number of received Host-to-Device non-Data FISes to which the device responded with R_ERRP. Retries of non-Data FISes are included in this count.

12.25.8.2.10 Identifier 009h

The counter with identifier 009h returns the number of times the device transitioned into the PHYRDY state from the PHYNRDY state, including but not limited to asynchronous signal events, power management events, and COMRESET events. If interface power management is enabled, then this counter may be incremented due to interface power management transitions.

12.25.8.2.11 Identifier 00Ah

The counter with identifier 00Ah returns the number of transmitted Device-to-Host Register FISes with the device reset signature in response to a COMRESET, which were successfully followed by an R_OK from the host.

12.25.8.2.12 Identifier 00Bh

The counter with identifier 00Bh returns the number of received Host-to-Device FISes of all types (Data and non-Data) to which the device responded with R_ERRP due to CRC error.

12.25.8.2.13 Identifier 00Dh

The counter with identifier 00Dh returns the number of received Host-to-Device FISes of all types (Data and non-Data) to which the devices responded with R_ERRP for reasons other than CRC error.

12.25.9 NCQ Non-Data log (log page 12h)

See Section 10.15.4 for a description of the NCQ Non-Data feature

To determine the supported NCQ Non-Data subcommands and their respective features, host software reads log address 12h. This log is supported if the NCQ Non-Data command is supported (i.e., IDENTIFY DEVICE Word 77 bit 5 is set to one). The following table defines the 512 bytes that make up the SATA NCQ Non-Data log. The value of the General Purpose Logging Version word is 0001h.

Table 164 NCQ Non-Data Log (12h) data structure definition

Dword	Bits	Description
0	Subcommand 0h	
	31-5	Reserved
	4	Supports Abort Selected TTAG
	3	Supports Abort Non-Streaming
	2	Supports Abort Streaming
	1	Supports Abort All
	0	Supports Abort NCQ
1	Subcommand 1h	
	31-3	Reserved
	2	Supports Read Data Not Continue
	1	Supports Write Data Not Continue
	0	Supports DEADLINE HANDLING
2-4	31-0	Reserved
5	Subcommand 5h	
	31-1	Reserved
	0	Supports Set Features
6-127	31-0	Reserved

12.25.9.1 Supports the Abort NCQ subcommand

If Supports the Abort NCQ subcommand is set to one, then the device supports the Abort NCQ Queue command (See Section 12.17.1). If Supports the Abort NCQ subcommand is cleared to zero, then the device does not support the Abort NCQ Queue command.

12.25.9.2 Supports Abort All

If Supports Abort All is set to one, then the device supports the value of Abort All for the Abort Type parameter of the Abort NCQ Queue command. If Supports Abort All is cleared to zero, then the device does not support the value of Abort All for the Abort Type parameter of the Abort NCQ Queue command.

12.25.9.3 Supports Abort Streaming

If Supports Abort Streaming is set to one, then the device supports the value of Abort Streaming for the Abort Type parameter of the Abort NCQ Queue command. If Supports Abort Streaming is cleared to zero, then the device does not support the value of Abort Streaming for the Abort Type parameter of the Abort NCQ Queue command.

12.25.9.4 Supports Abort Non-Streaming

If Supports Abort Non-Streaming is set to one, then the device supports the value of Abort Non-Streaming for the Abort Type parameter of the Abort NCQ Queue command. If Supports Abort Non-Streaming is cleared to zero, then the device does not support the value of Abort Non-Streaming for the Abort Type parameter of the Abort NCQ Queue command.

12.25.9.5 Supports the Abort Selected TTAG

If Supports Abort Selected TTAG is set to one, then the device supports the value of Abort Selected for the Abort Type parameter of the Abort NCQ Queue command. If Supports Abort Selected TTAG is cleared to zero, then the device does not support the value of Abort Selected for the Abort Type parameter of the Abort NCQ Queue command.

12.25.9.6 Supports the Deadline Handling subcommand

If Supports the Deadline Handling subcommand is set to one, then the device supports the Deadline Handling command. If the Supports the Deadline Handling subcommand is cleared to zero, then the device does not support the Deadline Handling command.

12.25.9.7 Supports WDNC

If Supports WDNC is set to one, then the device supports the WDNC bit of the DEADLINE HANDLING command. If Supports WDNC is cleared to zero, then the device does not support the WDNC bit of the DEADLINE HANDLING command.

12.25.9.8 Supports RDNC

If Supports RDNC is set to one, then the device supports the RDNC bit of the Deadline Handling command. If Supports RDNC is cleared to zero, then the device does not support the WDNC bit of the Deadline Handling command.

12.25.9.9 Supports Set Features

If Supports Set Features is set to one, then the device supports the value of Set Features for the SET FEATURES subcommand of the NCQ Non-Data command. If the Set Features bit is cleared to zero, then the device does not support the SET FEATURES subcommand of the NCQ NONDATA command.

12.25.10 NCQ Send and Receive log (log page 13h)

If the SEND AND RECEIVE QUEUED COMMANDS SUPPORTED bit is set to one, the supported Send FPDMA Queued (64h) subcommands, Receive FPDMA Queued (65h) subcommands, and their respective features, the host reads log address 13h. If the NCQ FEATURE SET SUPPORTED bit is cleared to zero, then the SEND AND RECEIVE QUEUED COMMANDS SUPPORTED bit shall be cleared to zero. The IDENTIFY DEVICE data contains a copy of the SEND AND RECEIVE QUEUED COMMANDS SUPPORTED bit (see IDENTIFY DEVICE data Word 77).

The 512 bytes that make up the NCQ Send and Receive log are shown below.

Table 165 SATA NCQ Send and Receive log (log page 00h)

Offset	Type	Description
0..3	DWord	Subcommands supported
		Bit **Description** 31:0 Reserved
4..7	DWord	Data Set Management features supported
		Bit **Description** 31:0 Reserved
8..11	DWord	Supports Read Log
		Bit **Description** 31:3 Reserved 2 QUEUED READ LOG DMA EXT FEATURE FIELD SUPPORTED bit (see Section12.25.10.1) 1 Reserved 0 QUEUED READ LOG DMA EXT SUPPORTED bit (see Section 12.25.10.2)
12..15	DWord	Supports Write Log
		Bit **Description** 31:1 Reserved 0 QUEUED WRITE LOG DMA EXT SUPPORTED bit (see Section 12.25.10.3)
16..511		Reserved

12.25.10.1 QUEUED READ LOG DMA EXT FEATURE FIELD SUPPORTED bit

If the QUEUED READ LOG DMA EXT FEATURE FIELD SUPPORTED bit is set to one, the device supports the READ LOG DMA EXT subcommand of the with encapsulation of the READ LOG DMA EXT FEATURE field. If the QUEUED READ LOG DMA EXT FEATURE FIELD SUPPORTED bit is cleared to zero, the device does not support the READ LOG DMA EXT subcommand of the RECEIVE FPDMA QUEUED command with encapsulation of the READ LOG DMA EXT FEATURE field.

12.25.10.2 QUEUED READ LOG DMA EXT SUPPORTED bit

If the QUEUED READ LOG DMA EXT SUPPORTED bit is set to one, the device supports the READ LOG DMA EXT subcommand of the RECEIVE FPDMA QUEUED (65h). If the QUEUED READ LOG DMA EXT SUPPORTED bit is cleared to zero, the device does not support the READ LOG DMA EXT subcommand of the RECEIVE FPDMA QUEUED command. The QUEUED READ LOG DMA EXT SUPPORTED bit shall be set to one if the QUEUED READ LOG DMA EXT FEATURE FIELD SUPPORTED bit is set to one.

12.25.10.3 QUEUED WRITE LOG DMA EXT SUPPORTED bit

If the QUEUED WRITE LOG DMA EXT SUPPORTED bit is set to one, the device supports the WRITE LOG DMA EXT subcommand of the SEND FPDMA QUEUED command (see 12.52). If the QUEUED WRITE LOG DMA EXT SUPPORTED bit is cleared to zero, the device does not support the WRITE LOG DMA EXT command of the SEND FPDMA QUEUED command.

12.25.11 Rebuild Assist log (log page 15h)

See Section 10.16 for a description of the Rebuild Assist feature.

If the device supports the Rebuild Assist feature (i.e., IDENTIFY DEVICE data Word 78 bit 11 is set to one), then the Rebuild Assist log shall be supported

Table 166 Rebuild Assist log (15h) data structure definition

Byte	7	6	5	4	3	2	1	0
0	Reserved							Rebuild Assist Enabled
1…6	Reserved							
7	Physical Element Length (N)							
8	(MSB)							
	Disabled Physical Element Mask							
7 + N								(LSB)
8 + N	(MSB)							
	Disabled Physical Elements							
7+(2×N)								(LSB)
8+(2×N)..511	Reserved							

Physical Element Length

The Physical Element Length field indicates the number of bytes in the Disabled Physical Element Mask field and the number of bytes in the Disabled Physical Elements field. The device shall ignore any attempt by the host to change the value of this field when writing to the Rebuild Assist log.

Disabled Physical Element Mask

The Disabled Physical Element Mask field indicates that bits in the Disabled Physical Elements field are supported. The device shall ignore any attempt by the host to change the value of this field when writing to the Rebuild Assist log.

Disabled Physical Elements

The Disabled Physical Elements field specifies if physical elements shall be disabled. Each bit that is set to one in the Disabled Physical Elements field specifies that LBAs associated with this physical element shall respond to read commands and write commands as if the associated LBAs have predicted errors.

Each bit that is set to zero in the Disabled Physical Elements field specifies that LBAs associated with this physical element shall respond to read commands and write commands as if the associated LBAs do not have predicted errors.

12.25.12 Write Stream Error log (log page 21h)

Table 167 defines the format of the Write Stream Error log. Entries are placed into the Write Stream Error log only when the SE bit is set to one in the Status Register. The 512 bytes returned shall contain a maximum of 31 error entries. The Write Stream Error Count shall contain the total number of Write Stream Errors detected since the last successful completion of the Read Log Ext command with LBA Low register set to 21h. This error count may be greater than 31, but only the most 31 errors are represented by entries in the log. If the Write Stream Error Count reaches the maximum value that can be represented after the next error is detected the Write Stream Error Count shall remain at the maximum value. After successful completion of a Read Log Ext command with the LBA Low Register set to 21h, the Write Stream Error Log shall be reset to a power-on or hardware reset condition, with the Error Log Index and Write Stream Error Count cleared to zero. The Write Stream Error Log is not reserved across power cycles and hardware reset.

Table 167 Write Stream Error Log

Description	Bytes	Offset
Structure Version	1	00h
Error Log Index	1	01h
Write Stream Error Log Count	2	02h
Reserved	12	04h
Write Stream Error Log Entry #1	16	10h
Write Stream Error Log Entry #2	16	20h
...		
Write Stream Error Log Entry #31	16	1F0h
	512	

The Data Structure Version field shall contain a value of 02h indicating the second revision of the structure format.
The Write Stream Error Log Count field shall contain the number of Write Stream command entries since the last power on, since this log was last read, or since hardware reset was executed.
The Error Log Index indicates the error log data structure representing the most recent error. Only values (31:0) are valid.

12.25.13 Read Stream Error log (log page 22h)

Table 168 defines the format of the Read Stream Error log. Entries are placed into the Read Stream Error log only when the SE bit is set to one in the Status Register. The 512 bytes returned shall contain a maximum of 31 error entries. The Read Stream Error Count shall contain the total number of Read Stream Errors detected since the last successful completion of the Read Log Ext command with LBA Low register set to 22h. This error count may be greater than 31, but only the most recent 31 errors are represented by entries in the log. If the Read Stream Error Count reaches the maximum value that can be represented after the next error is detected the Read Stream Error Count shall remain at the maximum value. After successful completion of a Read Log Ext command with the LBA Low Register set to 22h, the Read Stream Error Log shall be reset to a power-on or hardware reset condition, with the Error Log Index and Read Stream Error Count cleared to zero. The Read Stream Error Log is not preserved across power cycles and hardware reset.

Table 168 Read Stream Error Log

Description	Bytes	Offset
Structure Version	1	00h
Error Log Index	1	01h
Read Stream Error Log Count	2	02h
Reserved	12	04h
Read Stream Error Log Entry #1	16	10h
Read Stream Error Log Entry #2	16	20h
...		
Read Stream Error Log Entry #31	16	1F0h
	512	

The Data Structure Version field shall contain a value of 02h indicating the second revision of the structure format.
The Read Stream Error Log Count field shall contain the number of uncorrected sector entries currently reportable to the host. This value may exceed 31.
The Error Log Index indicates the error log data structure representing the most recent error. Only values (31:1) are valid.

The following table defines the format of each entry in the Read Stream Error Log.

Table 169 Stream Error Log entry

Description	Bytes	Offset
Feature Register Contents Value (current)	1	00h
Feature Register Contents Value (previous)	1	01h
Status Register Contents Value	1	02h
Error Register Contents Value	1	03h
LBA (7:0)	1	04h
LBA (15:8)	1	05h
LBA (23:16)	1	06h
LBA (31:24)	1	07h
LBA (39:32)	1	08h
LBA (47:40)	1	09h
Reserved	2	0A-0Bh
Sector Count (LSB)	1	0Ch
Sector Count (MSB)	1	0Dh
Reserved	2	0E-0Fh

Byte (1:0) contains the contents of the Feature Register when the error occurred. This Value shall be set to 0FFFFh for s deferred write error.
Byte 2 contains the contents of the Status Register when the error occurred.
Byte 3 contains the contents of the Error Register when the error occurred.
Byte (9:4) indicates the starting LBA of the error.
Byte (13:12) indicate the length of the error. Therefore, each entry may describe a range of sectors at the given address and spanning the specified number of sectors.

12.25.14 Current Device Internal Status Data log (log page 24h)

The Current Device Internal Status Data log consists of the Current Device Internal Status Data header page (i.e., log page 0) (see Section 12.25.14.1); and zero or more Current Device Internal Status Data pages (i.e., log pages 1..n) (see Section 12.25.14.2).

There are 3 conditions of the number of log pages indicated in the General Purpose Log Directory (i.e., log 00h). They may change as a result of processing a power on reset; or a download microcode activation; or shall not change from the completion of processing a power on reset until a subsequent power on reset; or a download microcode activation; or shall be the largest number of pages of Internal Status Data that the device is capable of returning.

The device shall return data for all pages with page numbers less than the log size reported in the General Purpose Log Directory for this log (i.e., 24h). The current device internal status data is the data representing the internal state of the device at the time the Current Device Internal Status Data log was read with the FEATURE field set to 0001h and shall not change until the device processes a subsequent read of the Current Device Internal Status Data log with bit 0 in the FEATURE field set to one and a download microcode activation and a power on reset; and a software reset. The current device internal status data may be retrieved by one or more reads of log pages within the range of 0..n. The Current Device Internal Status Data log consists of three areas.

12.25.14.1 Current Device Internal Status Data header page

The Current Device Internal Status Data header is described in the following table.

Table 170 Current Device Internal Status Data header (page 0)

Offset	Type	Description
0	Bytes	LOG ADDRESS field (see Section 12.25.14.1.1)
1..3	Bytes	Reserved
4..7	DWord	Organization identifier (see Section 12.25.14.1.2)
		Bit Description 31:24 Reserved 23:0 IEEE OUI field
8..9		DEVICE INTERNAL STATUS DATA AREA 1 LAST LOG PAGE field (see Section 12.25.14.1.3)
10..11		DEVICE INTERNAL STATUS DATA AREA 2 LAST LOG PAGE field (see Section 12.25.14.1.4)
12..13		DEVICE INTERNAL STATUS DATA AREA 3 LAST LOG PAGE field (see Section12.25.14.1.5)
14..381		Reserved
382		SAVED DATA AVAILABLE field (see Section 12.25.14.1.6)
383		SAVED DATA GENERATION NUMBER field (see Section 12.25.14.1.7)
384..511	Bytes	REASON IDENTIFIER field (see Section 12.25.14.1.8)

12.25.14.1.1 LOG ADDRESS field

The LOG ADDRESS field shall be set to 24h.

12.25.14.1.2 Organization identifier

The IEEE OUI field shall contain a 24-bit canonical form OUI assigned by the IEEE to the organization that is able to interpret the Current Device Internal Status Data in this log.

12.25.14.1.3 DEVICE INTERNAL STATUS DATA AREA 1 LAST LOG PAGE field

The DEVICE INTERNAL STATUS DATA AREA 1 LAST LOG PAGE field contains the value of the last log page of Device Internal Status data area 1 within the Device Internal Status data pages. If the Device Internal Status data area 1 does not contain data, the DEVICE INTERNAL STATUS DATA AREA 1 LAST LOG PAGE field shall be cleared to zero. If the DEVICE INTERNAL STATUS DATA AREA 1 LAST LOG PAGE field is not cleared to zero, the Device Internal Status data area 1 begins at page one; and ends at the page indicated by the DEVICE INTERNAL STATUS DATA AREA 1 LAST LOG PAGE field.

12.25.14.1.4 DEVICE INTERNAL STATUS DATA AREA 2 LAST LOG PAGE field

The DEVICE INTERNAL STATUS DATA AREA 2 LAST LOG PAGE field contains the value of the last page of Device Internal Status data area 2 within the Device Internal Status data pages.

The value in the DEVICE INTERNAL STATUS DATA AREA 2 LAST LOG PAGE field shall be greater than or equal to the value in the DEVICE INTERNAL STATUS DATA AREA 1 LAST LOG PAGE field. If the DEVICE INTERNAL STATUS DATA AREA 2 LAST LOG PAGE field is not cleared to zero, then the Device Internal Status data area 2 begins at page one; and ends at the page indicated in DEVICE INTERNAL STATUS DATA AREA 2 LAST LOG PAGE field.

12.25.14.1.5 DEVICE INTERNAL STATUS DATA AREA 3 LAST LOG PAGE field

The DEVICE INTERNAL STATUS DATA AREA 3 LAST LOG PAGE field contains the value of the last page of Device Internal Status data area 3 within the Device Internal Status data pages.
The value in the DEVICE INTERNAL STATUS DATA AREA 3 LAST LOG PAGE field shall be greater than or equal to the value in the INTERNAL STATUS DATA AREA 2 LAST LOG PAGE field. If the DEVICE INTERNAL STATUS DATA AREA 3 LAST LOG PAGE field is not cleared to zero, then the Device Internal Status data area 3 begins at page one; and ends at the page indicated in DEVICE INTERNAL STATUS DATA AREA 3 LAST LOG PAGE field.

12.25.14.1.6 SAVED DATA AVAILABLE field

If the Saved Device Internal Status Data log is supported, the SAVED DATA AVAILABLE field shall contain the value of the SAVED DATA AVAILABLE field in the Saved Device Internal Status Data log. If the Saved Device Internal Status Data log is not supported, the SAVED DATA AVAILABLE field shall be reserved.

12.25.14.1.7 SAVED DATA GENERATION NUMBER field

If the Saved Device Internal Status Data log is supported, the SAVED DATA GENERATION NUMBER field shall contain the value of the SAVED DATA GENERATION NUMBER field in the Saved Device Internal Status Data log. If the Save Device Internal Status Data log is not supported, the SAVED DATA GENERATION NUMBER field shall be reserved.

12.25.14.1.8 REASON IDENTIFIER field

The REASON IDENTIFIER field contains a vendor specific identifier that describes the operating conditions of the device at the time of capture. The REASON IDENTIFIER field should provide an identification of different unique operating conditions of the device.

12.25.14.2 Current Device Internal Status data pages

The Current Device Internal Status Data log pages shall represent the device internal state.

Table 171 Current Device Internal Status Data header (pages 1..n)

Offset	Type	Description
0..511	Bytes	**Vendor Specific**

12.25.15 Saved Device Internal Status Data log (log page 25h)

The Saved Device Internal Status Data Log consists of the Saved Device Internal Status Data header page (i.e., log page 0); and zero or more Saved Device Internal Status Data pages (i.e., log pages 1..n). The saved device internal status data in the Saved Device Internal Status Data log is a device initiated capture of the device internal state. The contents of the Saved Device Internal Status Data log shall persist across all resets. The saved device internal status data log consists of three areas.

12.25.15.1 Current Device Internal Status data pages

The Saved Device Internal Status Data header is described in the following table.

Table 172 Saved Device Internal Status Data header (page 0)

Offset	Type	Description
0	Bytes	LOG ADDRESS field (see Section 12.25.15.1.1)
1..3	Bytes	Reserved
4..7	DWord	Organization identifier (see Section 12.25.14.1.2)
		Bit Description 31:24 Reserved 23:0 IEEE OUI field
8..9		DEVICE INTERNAL STATUS DATA AREA 1 LAST LOG PAGE field (see Section 12.25.14.1.3)
10..11		DEVICE INTERNAL STATUS DATA AREA 2 LAST LOG PAGE field (see Section 12.25.14.1.4)
12..13		DEVICE INTERNAL STATUS DATA AREA 3 LAST LOG PAGE field (see Section 12.25.14.1.5)
14..381		Reserved
382		SAVED DATA AVAILABLE field (see Section 12.25.15.1.2)
383		SAVED DATA GENERATION NUMBER field (see Section 12.25.15.1.3)
384..511	Bytes	REASON IDENTIFIER field (see Section 12.25.14.1.8)

12.25.15.1.1 LOG ADDRESS field

The LOG ADDRESS field shall be set to 25h.

12.25.15.1.2 SAVED DATA AVAILABLE field

If the SAVED DATA AVAILABLE field is cleared to zero, the Saved Device Internal Status Data log does not contain saved Device Internal Status Data. If the SAVED DATA AVAILABLE field is set to one, the Saved Device Internal Status Data log contains Saved Device Internal Status Data. If any page of the Saved Device Internal Status Data in the Saved Device Internal Status Data log is read, the SAVED DATA AVAILABLE field shall be cleared to zero. If the device saves Saved Device Internal Status Data in the Saved Device Internal Status Data log, the SAVED DATA AVAILABLE field shall be set to one.

12.25.15.1.3 SAVED DATA GENERATION NUMBER field

The SAVED DATA GENERATION NUMBER field shall contain a value that is incremented each time the device initiates a capture of its internal device state into the Saved Device Internal Status Data.

12.25.15.2 Current Device Internal Status data pages

The Saved Device Internal Status Data log pages shall represent the device internal state.

Table 173 Saved Device Internal Status Data (pages 1..n)

Offset	Type	Description
0..511	Bytes	**Vendor Specific**

12.25.16 Sector Configuration log (log page 2Fh)

The format of the Sector Configuration log, which contains Sector Configuration descriptors, is defined in the following table. The Sector Configuration descriptors describe sector configurations. The sector configuration is specified using the Set Sector Configuration Ext command (see Section 12.59).

Table 174 Sector Configuration log

Description	Bytes	Offset
Sector Configuration descriptor Entry #0	16	00h
Sector Configuration descriptor Entry #1	16	10h
…		
Sector Configuration descriptor Entry #7	16	70h
Reserved	384	80h
	512	

12.25.16.1 Sector Configuration descriptor

The content of the Sector Configuration descriptor entry is shown below.

Table 175 Sector Configuration descriptor

Description		Bytes	Offset
Sector Configuration descriptor flags		1	00h
Bit	Description		
7	Descriptor Valid bit		
6:0	Reserved		
Logical To Physical Sector Relationship Setting field		1	01h
Descriptor Check field		2	02h
Logical Sector Size Setting field		4	04h
Reserved		8	08h
		16	

12.25.16.2 Descriptor Valid bit

If the Descriptor Valid bit is set to one, descriptor contains valid information. If the Descriptor Valid bit is cleared to zero, descriptor does not contain valid information.

12.25.16.3 Logical To Physical Sector Relationship Setting field

The Logical To Physical Sector Relationship Setting field indicates the setting to be used when a Set Sector Configuration Ext command (see Section 12.59) that specifies this Sector Configuration descriptor is processed.

12.25.16.4 Descriptor Check field

The Descriptor Check field indicates a value that is compared to the Command Check field in a Set Sector Configuration Ext command (see Section 12.59). The value in the Descriptor Check field shall not be equal to the value in the Descriptor Check field in any other valid Sector Configuration Descriptor in this device.

12.25.16.5 Logical Sector Size Setting field

The Logical Sector Size Setting field indicates the device logical sector size setting to be set when a Set Sector Configuration Ext command (see Section 12.59) is processed.

12.25.17 Identify Device Data log (log page 30h)

IDENTIFY DEVICE data log reports device configuration information. This log is read-only. Each page consists of a header field that is followed by defined statistics fields. If the Revision Number field in the page header is 0000h, then that page is not supported. All page data following the last defined statistic for that page is reserved.

Table 176 Identify Device Data Log

Description	Page
List of supported pages	00h
Copy of IDENTIFY DEVICE data	01h
Capacity	02h
Supported Capabilities	03h
Current Settings	04h
ATA Strings	05h
Security	06h
Reserved for Parallel ATA	07h
Serial ATA	08h
Zoned Device Information	09h
Reserved	0Ah..FFh

12.25.17.1 List of Supported IDENTIFY DEVICE data log pages (Page 00h)

IDENTIFY DEVICE data log page 00h contains a list of the supported pages. Entries are in order of ascending page number (e.g., 00h, 01h, 07h).

Table 177 List of supported IDENTIFY DEVICE data pages

Offset	Type	Content	
0..7	QWord	IDENTIFY DEVICE data log Information Header. This log page lists the numbers of the supported log pages	
		Bit	**Meaning**
		63:24	Reserved
		23:16	Page Number. Set to 00h.
		15:0	Revision number. Set to 0001h
8	Byte	Number of entries (n) in the following list	
9	Byte	Set to zero to indicate that page 00h is supported	
10	Byte	Set to one to indicate that page 01h is supported	
…			
n+8	Byte	Page number of nth supported IDENTIFY DEVICE data log page	
n+9..511		Reserved	

12.25.17.2 Copy of IDENTIFY DEVICE data (log page 01h)

This page is a copy of IDENTIFY DEVICE data Words 0...255.

12.25.17.3 Capacity (log page 02h)

The Capacity log page provides information about the capacity of the device.

Table 178 Capacity log page

Offset	Type	Content
0..7	QWord	Capacity page information header
		Bit **Meaning** 63 Set to one. 62:24 Reserved 23:16 Page Number. Shall be set to 02h. 15:0 Revision number. Shall be set to 0001h
8..15	QWord	Device Capacity
		Bit **Meaning** 63 Set to one. 62:48 Reserved 47:0 ACCESSIBLE CAPACITY field
16..23	QWord	Physical/Logical Sector Size
		Bit **Meaning** 63 Contents of the QWord are valid 62 LOGICAL TO PHYSICAL SECTOR RELATIONSHIP SUPPORTED bit 61 LOGICAL SECTOR SIZE SUPPORTED bit 60:22 Reserved 21:20 ALIGNMENT ERROR REPORTING field 19:16 LOGICAL TO PHYSICAL SECTOR RELATIONSHIP field 15:0 LOGICAL SECTOR OFFSET field
24..31	QWord	Logical Sector Size
		Bit **Meaning** 63 Contents of the QWord are valid 62..32 Reserved 31..0 LOGICAL SECTOR SIZE field
32..39	QWord	Nominal Buffer Size
		Bit **Meaning** 63 Contents of the QWord are valid 62:0 BUFFER SIZE field
40..511		Reserved

12.25.17.4 Supported Capabilities (log page 03h)

The Supported Capabilities log page provides a mechanism for the device to report support for feature sets, features, commands, and other device capabilities.

Table 179 Supported Capabilities log page

Offset	Type	Content
0..7	QWord	Supported Capabilities page information header.
		Bit **Meaning** 63 Set to one. 62:24 Reserved 23:16 Page Number. Set to 03h. 15:0 Revision number. Set to 0001h
8..15	QWord	Supported Capabilities
		Bit **Meaning** 63 Set to one. 62:53 Reserved 52 SFF-8447 REPORTING bit (=1) 51 Reserved 50 DATA SET MANAGEMENT XL SUPPORTED bit (=1) 49 SET SECTOR CONFIGURATION SUPPORTED bit (=1) 48:46 Reserved 45 REQUEST SENSE DEVICE FAULT SUPPORTED bit (=1) 44 DSN SUPPORTED bit (=0) 43 LOW POWER STANDBY SUPPORTED bit (=0) 42 SET EPC POWER SOURCE SUPPORTED bit (=0) 41 AMAX ADDR SUPPORTED bit (=0) 40 Reserved for CFA 39 DRAT SUPPORTED bit (=0) 38 LPS MISALIGNMENT REPORTING SUPPORTED bit (=0) 37 Reserved 36 READ BUFFER DMA SUPPORTED bit (=1) 35 WRITE BUFFER DMA SUPPORTED bit (=1) 34 Reserved 33 Download Microcode DMA SUPPORTED bit (=1) 32 28-BIT SUPPORTED bit (=0) 31 RZAT SUPPORTED bit (=0) 30 Reserved 29 NOP SUPPORTED bit (=1) 28 READ BUFFER SUPPORTED bit (=1) 27 WRITE BUFFER SUPPORTED bit (=1) 26 Reserved 25 READ LOOK-AHEAD SUPPORTED bit (=1) 24 VOLATILE WRITE CACHE SUPPORTED bit (=1) 23 SMART bit (=1) 22 FLUSH CACHE EXT SUPPORTED bit (=1) 21 Reserved 20 48-BIT SUPPORTED bit (=1) 19 Reserved 18 SPIN-UP SUPPORTED bit (=1) 17 PUIS SUPPORTED bit (=1) 16 APM SUPPORTED bit (=1) 15 CFA SUPPORTED bit (=0) 14 Download Microcode SUPPORTED bit (=1) 13 UNLOAD SUPPORTED bit (=0)

Offset	Type	Content
		12 The WRITE DMA FUA EXT and WRITE MULTIPLE FUA EXT commands are supported (=1) 11 GPL SUPPORTED bit (=1) 10 STREAMING SUPPORTED bit (=0) 9 Reserved 8 SMART SELF-TEST SUPPORTED bit (=1) 7 SMART ERROR LOGGING SUPPORTED bit (=1) 6 EPC SUPPORTED bit (=1) 5 SENSE DATA SUPPORTED bit (=1) 4 FREE-FALL SUPPORTED bit (=0) 3 DM MODE 3 SUPPORTED bit (=1) 2 GPL DMA SUPPORTED bit (=1) 1 WRITE UNCORRECTABLE SUPPORTED bit (=1) 0 WRV SUPPORTED bit (=0)
16..23	QWord	Download Microcode Capabilities **Bit Meaning** 63 Contents of the QWord are valid 62:36 Reserved 35 DM CLEARS NONACTIVATED DEFERRED DATA bit 34 DM OFFSETS DEFERRED SUPPORTED bit 33 DM IMMEDIATE SUPPORTED bit 32 DM OFFSETS IMMEDIATE SUPPORTED bit 31:16 DM MAXIMUM TRANSFER SIZE field 15:0 DM MINIMUM TRANSFER SIZE field
24..31	QWord	Nominal Media Rotation Rate **Bit Meaning** 63 Set to one 62:16 Reserved 15:0 NOMINAL MEDIA ROTATION RATE field
32..39	QWord	Nominal Form Factor [was Word 168] **Bit Meaning** 63 Contents of the QWord are valid 62:4 Reserved 3:0 Nominal Form Factor
40..47	QWord	Write-Read-Verify Sector Count Mode 3 **Bit Meaning** 63 Contents of the QWord are valid 62:32 Reserved 31:0 WRV MODE 3 COUNT field
48..55	QWord	Write-Read-Verify Sector Count Mode 2 **Bit Meaning** 63 Contents of the QWord are valid 62:32 Reserved 31:0 WRV MODE 2 COUNT field
56..71	DQWord	Worldwide name [was Word 108] **Bit Meaning** 127 Set to one 126:64 Reserved 63:0 Worldwide name
72..79	QWord	DATA SET MANAGEMENT **Bit Meaning** 63 Set to one 62:1 Reserved 0 TRIM SUPPORTED bit (Not Supported)

Offset	Type	Content
80..95	DQWord	Utilization Per Unit Time
		Bit **Meaning** 127 Contents of the DQWord are valid (=0) 126:120 Reserved 119:112 UTILIZATION TYPE field 111:104 UTILIZATION UNITS field 103:96 UTILIZATION INTERVAL field 95:64 Reserved 63:32 UTILIZATION B field 31:0 UTILIZATION A field
96..103	QWord	Utilization Usage Rate Support
		Bit **Meaning** 63 Contents of the QWord are valid (=0) 62:24 Reserved 23 SETTING RATE BASIS SUPPORTED bit 22:9 Reserved 8 SINCE POWER ON RATE BASIS SUPPORTED bit 7:5 Reserved 4 POWER ON HOURS RATE BASIS SUPPORTED bit 3:1 Reserved 0 DATE/TIME RATE BASIS SUPPORTED bit
104..111	QWord	Zoned Capabilities
		Bit **Meaning** 63 Contents of the QWord are valid (=0) 62:2 Reserved 1:0 ZONED field
112..119	QWord	Supported ZAC Capabilities
		Bit **Meaning** 63 Contents of the QWord are valid (=0) 62:5 Reserved 4 NON-DATA RESET WRITE POINTERS EXT SUPPORTED bit 3 NON-DATA FINISH ZONE EXT SUPPORTED bit 2 NON-DATA CLOSE ZONE EXT SUPPORTED bit 1 NON-DATA OPEN ZONE EXT SUPPORTED bit 0 REPORT ZONES EXT SUPPORTED bit
120..127	QWord	Advanced Background Operations Capabilities
		Bit **Meaning** 63 Contents of the QWord are valid (=0) 62 ABO FOREGROUND MODE SUPPORTED bit 61 ABO IR MODE SUPPORTED bit 60:48 Reserved 47:16 ABO MINIMUM FRACTION field 15:0 ABO MINIMUM SUPPORTED TIMELIMIT field
128..135	QWord	Advanced Background Operations Recommendations
		Bit **Meaning** 63 Contents of the QWord are valid (=0) 62:32 Reserved 31:16 DEVICE MAINTENANCE POLLING TIME field 15:0 ABO RECOMMENDED ABO START INTERVAL field
136..143	QWord	Queue Depth
		Bit **Meaning** 63 Contents of the QWord are valid 62:5 Reserved 4:0 QUEUE DEPTH field

Offset	Type	Content
144..151	QWord	Supported SCT Capabilities
		Bit **Meaning** 63 Contents of the QWord are valid 62:27 Reserved 26 SCT WRITE SAME FUNCTION 103 SUPPORTED bit 25 SCT WRITE SAME FUNCTION 102 SUPPORTED bit 24 SCT WRITE SAME FUNCTION 101 SUPPORTED bit 23:19 Reserved 18 SCT WRITE SAME FUNCTION 3 SUPPORTED bit 17 SCT WRITE SAME FUNCTION 2 SUPPORTED bit 16 SCT WRITE SAME FUNCTION 1 SUPPORTED bit 15:6 Reserved 5 SCT DATA TABLES SUPPORTED bit 4 SCT FEATURE CONTROL SUPPORTED bit 3 SCT ERROR RECOVERY CONTROL SUPPORTED bit 2 SCT WRITE SAME SUPPORTED bit 1 Reserved 0 SCT SUPPORTED bit
152..159	QWord	Depopulation Capabilities
		Bit **Meaning** 63 Contents of the QWord are valid 62:3 Reserved 2 RESTORE ELEMENTS AND REBUILD SUPPORTED bit 1 GET PHYSICAL ELEMENT STATUS SUPPORTED bit 0 REMOVE ELEMENT AND TRUNCATE SUPPORTED bit
160..167	QWord	Depopulation Execution Time
		Bit **Meaning** 63 Contents of the QWord are valid 62:0 DEPOPULATION TIME field
168..503	QWord	Reserved
504..511	QWord	Vendor Specific Supported Capabilities
		Bit, Meaning 63 Contents of the QWord are valid 62:0 Vendor specific

12.25.17.5 Current Settings (log page 04h)

The Current Settings log page provides a mechanism for the device to report the current settings for feature sets, features, and other device capabilities.

Table 180 Current Settings log page

Offset	Type	Content
0..7	QWord	Supported Capabilities page information header.
		Bit **Meaning** 63 Set to one. 62:24 Reserved 23:16 Page Number. Set to 04h. 15:0 Revision number. Set to 0001h
8..15	QWord	Current Settings
		Bit **Meaning** 63 Set to one. 62:20 Reserved 19 FW ACTIVATION PENDING bit 18:17 Reserved 16 DSN ENABLED bit 15 EPC ENABLED bit 14 8-BIT PIO ENABLED bit 13 VOLATILE WRITE CACHE ENABLED bit 12 Reserved for CFA 11 REVERTING TO DEFAULTS ENABLED bit 10 SENSE DATA ENABLED bit 9 Reserved 8 NON-VOLATILE WRITE CACHE bit 7 READ LOOK-AHEAD ENABLED bit 6 SMART ENABLED bit 5 Reserved 4 Reserved 3 PUIS ENABLED bit 2 APM ENABLED bit 1 FREE-FALL ENABLED bit 0 WRV ENABLED bit
16..23	QWord	Feature Settings
		Bit **Meaning** 63 Contents of the QWord are valid 62:16 Reserved 17:16 POWER SOURCE field 15:8 APM LEVEL field 7:0 WRV MODE field
24..31	QWord	DMA Host Interface Sector Times
		Bit **Meaning** 63 Contents of the QWord are valid 62:16 Reserved 15:0 DMA SECTOR TIME field
32..39	QWord	PIO Host Interface Sector Times
		Bit **Meaning** 63 Contents of the QWord are valid 62:16 Reserved 15:0 PIO SECTOR TIME field
40..47	QWord	**Streaming minimum request size**

		Bit **Meaning** 63 Contents of the QWord are valid 62:16 Reserved 15:0 STREAM MIN REQUEST SIZE field
48..55	QWord	**Streaming access latency** **Bit** **Meaning** 63 Contents of the QWord are valid 62:16 Reserved 15:0 STREAM ACCESS LATENCY field
56..63	QWord	**Streaming Performance Granularity** **Bit** **Meaning** 63 Contents of the QWord are valid 62:32 Reserved 31:0 STREAM GRANULARITY field
64..71	QWord	**Free-fall Control Sensitivity** **Bit** **Meaning** 63 Contents of the QWord are valid 62:16 Reserved 7:0 FREE-FALL SENSITIVITY field
72..79	QWord	**Device Maintenance Schedule** **Bit** **Meaning** 63 Contents of the QWord are valid 62:48 Reserved 47:32 Time scheduled for device maintenance 31:16 Time to performance degradation 15:0 Minimum inactive time
80..511		**Reserved**

12.25.17.6 Strings (log page 05h)

The Strings log page provides a mechanism for the device to report ATA String based information.

Table 181 Strings log page

Offset	Type	Content
0..7	QWord	Strings page information header. **Bit** **Meaning** 63 Set to one. 62:24 Reserved 23:16 Page Number. Set to 05h. 15:0 Revision number. Set to 0001h
8..27	ATA String	Serial number
28..31		Reserved
32..39	ATA String	Firmware revision
40..47		Reserved
48..87	ATA String	Model number
88..95		Reserved
96..103	ATA String	Additional Product Identifier
104..511		Reserved

12.25.17.7 Security (log page 06h)

The Security log page provides a mechanism for the device to report Security based information.

Table 182 Security log page

Offset	Type	Content
0..7	QWord	Security page information header.
		Bit **Meaning** 63 Set to one. 62:24 Reserved 23:16 Page Number. Set to 06h. 15:0 Revision number. Set to 0001h
8..15	QWord	Master Password Identifier [was Word 92]
		Bit **Meaning** 63 Contents of the QWord are valid. 62:16 Reserved 15:0 Master Password Identifier
16..23	QWord	Security Status
		Bit **Meaning** 63 Contents of the QWord are valid 62:7 Reserved 6 SECURITY SUPPORTED bit 5 MASTER PASSWORD CAPABILITY bit 4 ENHANCED SECURITY ERASE SUPPORTED bit 3 SECURITY COUNT EXPIRED bit 2 SECURITY FROZEN bit 1 SECURITY LOCKED bit 0 SECURITY ENABLED bit
24..31	QWord	Time required for an Enhanced Erase mode SECURITY ERASE UNIT command [was Word 90]
		Bit **Meaning** 63 Contents of the QWord are valid 62:15 Reserved 14:0 ENHANCED SECURITY ERASE TIME field
32..39	QWord	Time required for a Normal Erase mode SECURITY ERASE UNIT command [was Word 89]
		Bit **Meaning** 63 Contents of the QWord are valid 62:15 Reserved 14:0 NORMAL SECURITY ERASE TIME field
40..47	QWord	Trusted Computing feature set
		Bit **Meaning** 63 Contents of the QWord are valid 62:1 Reserved 0 TRUSTED COMPUTING SUPPORTED bit
48..55	QWord	Security Capabilities
		Bit **Meaning** 63 Contents of the QWord are valid 62:5 Reserved 4 BLOCK ERASE SUPPORTED bit 3 OVERWRITE SUPPORTED bit 2 CRYPTO SCRAMBLE SUPPORTED bit 1 SANITIZE SUPPORTED bit 0 ENCRYPT ALL SUPPORTED bit
56..511		Reserved

12.25.17.8 Parallel ATA (log page 07h)

The Parallel ATA log page provides information about the Parallel ATA Transport. This page is not supported.

12.25.17.9 Serial ATA (log page 08h)

The Serial ATA log page provides information about the Serial ATA Transport.

Table 183 Serial ATA log page

Offset	Type	Content
0..7	QWord	Serial ATA page information header.
		Bit **Meaning** 63 Set to one. 62:24 Reserved 23:16 Page Number. Set to 08h. 15:0 Revision number. Set to 0001h
8..15	QWord	SATA Capabilities
		Bit **Meaning** 63 Set to one 62:29 Reserved for Serial ATA 28 DIPM SSP PRESERVATION SUPPORTED 27:25 Reserved for Serial ATA 24 NCQ AUTOSENSE SUPPORTED bit 23 SOFTWARE SETTINGS PRESERVATION SUPPORTED bit 22 HARDWARE FEATURE CONTROL SUPPORTED bit 21 IN-ORDER DATA DELIVERY SUPPORTED bit 20 DEVICE INITIATED POWER MANAGEMENT SUPPORTED bit 19 DMA SETUP AUTO-ACTIVATION SUPPORTED bit 18 NON-ZERO BUFFER OFFSETS SUPPORTED bit 17 SEND AND RECEIVE QUEUED COMMANDS SUPPORTED bit 16 NCQ Non-Data COMMAND SUPPORTED bit 15 NCQ STREAMING SUPPORTED bit 14 READ LOG DMA EXT AS EQUIVALENT TO READ LOG EXT SUPPORTED bit 13 DEVICE AUTOMATIC PARTIAL TO SLUMBER TRANSITIONS SUPPORTED bit 12 HOST AUTOMATIC PARTIAL TO SLUMBER TRANSITIONS SUPPORTED bit 11 NCQ PRIORITY INFORMATION SUPPORTED bit 10 UNLOAD WHILE NCQ COMMANDS ARE OUTSTANDING SUPPORTED bit 9 SATA PHY EVENT COUNTERS LOG SUPPORTED bit 8 RECEIPT OF HOST INITIATED POWER MANAGEMENT REQUESTS SUPPORTED bit 7 NCQ FEATURE SET SUPPORTED bit 6:3 Reserved for Serial ATA 2 SATA GEN3 SIGNALING SPEED SUPPORTED bit 1 SATA GEN2 SIGNALING SPEED SUPPORTED bit 0 SATA GEN1 SIGNALING SPEED SUPPORTED bit
16..23	QWord	Current SATA Settings

		Bit Meaning 63 Set to one 62:10 Reserved 9 AUTOMATIC PARTIAL TO SLUMBER TRANSITIONS ENABLED bit 8 SOFTWARE SETTINGS PRESERVATION ENABLED bit 7 HARDWARE FEATURE CONTROL IS ENABLED bit 6 IN-ORDER DATA DELIVERY ENABLED bit 5 DEVICE INITIATED POWER MANAGEMENT ENABLED bit) 4 DMA SETUP AUTO-ACTIVATION ENABLED bit 3 NON-ZERO BUFFER OFFSETS ENABLED bit 2:0 CURRENT SERIAL ATA SIGNAL SPEED field
24..39		Reserved for Serial ATA
40..41	Word	CURRENT HARDWARE FEATURE CONTROL IDENTIFIER field
42..43	Word	SUPPORTED HARDWARE FEATURE CONTROL IDENTIFIER field
44..511		Reserved for SATA

12.25.17.10 Zoned Device Information (log page 09h)

The Zoned Device Information log page provides information about the capabilities and functional settings of a zoned block device.

Table 184 Zoned Device Information log page

Offset	Type	Description
0..7	QWord	Zoned Device Information page information header
		Bit **Meaning** 63 Shall be set to one 62:24 Reserved 23:16 PAGE NUMBER field - shall be set to 09h 15:0 REVISION NUMBER field (Word) - shall be set to 0001h
8..15	QWord	Zoned device capabilities
		Bit **Meaning** 63 Shall be set to one 62:2 Reserved 1 REMOVE ELEMENT AND MODIFY ZONES SUPPORTED bit 0 URSWRZ bit
15..23	QWord	Zoned device settings
		Bit **Meaning** 63 Shall be set to one 62:0 Reserved
24..31	QWord	Reserved
32..39	QWord	Reserved
40..47	QWord	Maximum number of open Sequential Write Required zones
		Bit **Meaning** 63 Shall be set to one. 62:32 Reserved 31:0 MAXIMUM NUMBER OF OPEN SEQUENTIAL WRITE REQUIRED ZONES field
48..55	QWord	Version information
		Bit **Meaning** 63 Shall be set to one 62:16 Reserved 15:0 ZAC MINOR VERSION field
56..71	QWord	Reserved
72..79	QWord	Supported Zone Types
		Bit **Meaning** 63 Shall be set to one 62:3 Reserved 2 SEQUENTIAL WRITE REQUIRED SUPPORTED bit 1 Reserved 0 CONVENTIONAL SUPPORTED bit
80..511	Byte	Reserved

12.25.17.10.1 REMOVE ELEMENT AND MODIFY ZONES SUPPORTED bit

The A REMOVE ELEMENT AND MODIFY ZONES SUPPORTED bit set to one indicates that the device supports the RESTORE ELEMENTS AND MODIFY ZONES command. A REMOVE ELEMENT AND MODIFY ZONES SUPPORTED bit cleared to zero indicates that the device does not support the RESTORE ELEMENTS AND MODIFY ZONES command.

12.25.17.10.2 URSWRZ bit

The Unrestricted ReadS While Reading Zones (URSWRZ) bit indicates how read commands are processed in Sequential Write Required zones.

12.25.17.10.3 MAXIMUM NUMBER OF OPEN SEQUENTIAL WRITE REQUIRED ZONES field

The MAXIMUM NUMBER OF OPEN SEQUENTIAL WRITE REQUIRED ZONES field indicates the maximum number of Sequential Write Required zones that are allowed to have a Zone Condition of EXPLICITLY OPENED. The Manage Open Zone Resources function enforces this limit.
A value of FFFF FFFFh indicates that there is no limit for the number of open Sequential Write Required zones.

12.25.17.10.4 ZAC MINOR VERSION field

The ZAC MINOR VERSION field (see ZAC-2) indicates the version of the standard that guided the device implementation.

12.25.17.10.5 Zone Activation Capabilities

12.25.17.10.5.1 UPDATE URSWRZ SUPPORTED bit

If the UPDATE URSWRZ SUPPORTED bit is set to one, then the device supports the Update URSWRZ Bit subcommand of the SET FEATURES command. If the UPDATE URSWRZ SUPPORTED bit is cleared to zero, then the device does not support the Update URSWRZ Bit subcommand of the SET FEATURES command.

12.25.17.10.5.2 ZONE ACTIVATION CONTROL SUPPORTED bit

If the ZONE ACTIVATION CONTROL SUPPORTED bit is set to one, then the device supports the Zone Activation Control (see Section 12.55.6) subcommand of the SET FEATURES command. If the ZONE ACTIVATION CONTROL SUPPORTED bit is cleared to zero, then the device does not support the SET FEATURES subcommand for Zone Activation Control.

12.25.17.10.5.3 NOZSRC SUPPORTED bit

If the NOZSRC SUPPORTED bit is set to one, then the NOZSRC bit is supported in the ZONE ACTIVATE EXT command. If the NOZSRC SUPPORTED bit is cleared to zero, then the NOZSRC bit is not supported in the ZONE ACTIVATE EXT command.

12.25.17.10.6 MAXIMUM ACTIVATION field

The MAXIMUM ACTIVATION field is a 28-bit unsigned integer that indicates the maximum allowable value for the SUBSEQUENT NUMBER OF ZONES field in the Zone Activation Control (see Section 12.55.6) subcommand of the SET FEATURES command. If the MAXIMUM ACTIVATION field is cleared to zero, then there is no maximum value.

12.25.17.10.7 SUBSEQUENT NUMBER OF ZONES field

The SUBSEQUENT NUMBER OF ZONES field indicates the setting for the NUMBER OF ZONES field in the Zone Activation Control (see Section 12.55.6) subcommand of the SET FEATURES command. The setting of the SUBSEQUENT NUMBER OF ZONES field is non-volatile and shall not be affected by a power-on reset, a hardware reset, or a software reset.

12.25.17.10.8 Supported Zone Types

12.25.17.10.8.1 CONVENTIONAL SUPPORTED bit

If the CONVENTIONAL SUPPORTED bit is set to one, then conventional zones are supported. If the CONVENTIONAL SUPPORTED bit is cleared to zero, then conventional zones are not supported.

12.25.17.10.8.2 SEQUENTIAL WRITE REQUIRED SUPPORTED bit

If the SEQUENTIAL WRITE REQUIRED SUPPORTED bit is set to one, then Sequential Write Required zones are supported.

12.25.18 NAND Information log (log page D9h : Vendor Specific)

Table 185 NAND Information log

Byte	7	6	5	4	3	2	1	0
0	Reserved							
1	Page Code							
2-3	Page Length							
4-7	Feature Flags (Reserved)							NVC
8..15	Reserved							
16..31	Firmware Version							
32..511	Vendor Unique							

The NVC field (Byte 4, Bit 0) = NAND backed NVC Enabled
The Firmware Version filed (Bytes 16..31) = NAND current firmware version.

12.26 Read Log DMA Ext (47h)

The content of this command is the same as Read Log Ext. See Section 12.25.

Table 186 Read Log DMA Ext Command (47h)

Command Input

Field	Description
FEATURE	If not defined by the log specified by the LOG ADDRESS field, this field is reserved.
COUNT	Block Count
LBA	**Bit** **Description** 47:40 Reserved 39:32 PAGE NUMBER field (15:8) 31:16 Reserved 15:8 PAGE NUMBER field (7:0) 7:0 LOG ADDRESS field
DEVICE	**Bit** **Description** 7 Obsolete 6 N/A 5 Obsolete 4 Transport Dependent 3:0 Reserved
Command	7:0 47h

Normal Outputs

See Normal Outputs in Section 12.10 Flush Cache Ext (EAh)

Error Outputs

See Error Outputs in Section 12.25 Read Log Ext (2Fh)

12.27 Read Multiple (C4h)

The Read Multiple command reads one or more sectors of data from disk media, and then transfers the data from the device to the host.

The sectors are transferred through the Data Register 16 bits at a time. Command execution is identical to the Read Sector(s) command except that an interrupt is generated for each block (as defined by the Set Multiple command) instead of for each sector.

Table 187 Read Multiple Commands (C4h)

Command Input

Field	Description
FEATURE	N/A
COUNT	The number of logical sectors to be transferred. A value of 00h indicates that 256 logical sectors are to be transferred
LBA	LBA of first logical sector to be transferred
DEVICE	**Bit** **Description** 7:5 Obsolete 4 Transport Dependent 3:0 Reserved
Command	7:0 C4h

Normal Outputs

See Normal Outputs in Section 12.9 Flush Cache (E7h)

Error Outputs

See Error Outputs in Section 12.22 Read DMA (C8h/C9h)

12.28 Read Multiple Ext (29h)

The Read Multiple Ext command reads one or more sectors of data from disk media, and then transfers the data from the device to the host.

The sectors are transferred through the Data Register 16 bits at a time. Command execution is identical to the Read Sector(s) command except that an interrupt is generated for each block (as defined by the Set Multiple command) instead of for each sector.

Table 188 Read Multiple Ext Command (29h)

Command Input

Field	Description
FEATURE	Reserved
COUNT	The number of logical sectors to be transferred. A value of 0000h indicates that 65536 logical sectors are to be transferred
LBA	LBA of first logical sector to be transferred
DEVICE	**Bit Description** 7:5 Obsolete 4 Transport Dependent 3:0 Reserved
Command	7:0 29h

Normal Outputs

See Normal Outputs in Section 12.10 Flush Cache Ext (EAh)

Error Outputs

Field	Description
ERROR	**Bit Description** 7 INTERFACE CRC bit 6 UNCORRECTABLE ERROR bit 5 N/A 4 ID NOT FOUND bit 3 N/A 2 ABORT bit 1:0 Obsolete
COUNT	Reserved
LBA	LBA of First Unrecoverable Error
DEVICE	**Bit Description** 7 Obsolete 6 N/A 5 Obsolete 4 Transport Dependent 3:0 Reserved
STATUS	**Bit Description** 7:6 Transport Dependent 5 DEVICE FAULT bit 4 N/A 3 Transport Dependent 2 N/A 1 SENSE DATA AVAILABLE bit 0 ERROR bit

12.29 Read Native Max Address (F8h)

This command returns the native max LBA/CYL of HDD which is not affected by Set Max Address command. The 48-bit native max address is greater than 268,435,455; the Read Native Max Address command shall return a value of 268,435,455

Table 189 Read Native Max ADDRESS (F8h)

Block Normal Outputs Command								
Register	7	6	5	4	3	2	1	0
Data	-	-	-	-	-	-	-	-
Feature	-	-	-	-	-	-	-	-
Sector Count	-	-	-	-	-	-	-	-
Sector Number	-	-	-	-	-	-	-	-
Cylinder Low	-	-	-	-	-	-	-	-
Cylinder High	-	-	-	-	-	-	-	-
Device/Head	1	1	1	D	-	-	-	-
Command	1	1	1	1	1	0	0	0

Command Block Command Input								
Register	7	6	5	4	3	2	1	0
Data	-	-	-	-	-	-	-	-
Error	…See Below…							
Sector Count	-	-	-	-	-	-	-	-
Sector Number	V	V	V	V	V	V	V	V
Cylinder Low	V	V	V	V	V	V	V	V
Cylinder High	V	V	V	V	V	V	V	V
Device/Head	-	-	-	-	H	H	H	H
Status	…See Below…							

Error Register							
7	6	5	4	3	2	1	0
CRC	UNC	0	IDN	0	ABT	T0N	AMN
0	0	0	0	0	V	0	0

Status Register							
7	6	5	4	3	2	1	0
BSY	RDY	DF	DSC	DRQ	COR	IDX	ERR
0	V	0	-	-	0	-	V

Input Parameters From The Device

Sector Number This register contains native max LBA bits 0-7.

Cylinder High/Low This register contains native max LBA bits 8-15 (Low), 16-23 (High).

H This register contains native max LBA bits 24-27.

12.30 Read Native Max Address Ext (27h)

This command returns the native max LBA of HDD which is not affected by Set Max Address Ext command.

Table 190 Read Native Max Address Ext (27h)

Command Block Normal Outputs									
Register		7	6	5	4	3	2	1	0
Data Low		-	-	-	-	-	-	-	-
Data High		-	-	-	-	-	-	-	-
Feature	Current	-	-	-	-	-	-	-	-
	Previous	-	-	-	-	-	-	-	-
Sector Count	Current	-	-	-	-	-	-	-	-
	Previous	-	-	-	-	-	-	-	-
Sector Number	Current	-	-	-	-	-	-	-	-
	Previous	-	-	-	-	-	-	-	-
Cylinder Low	Current	-	-	-	-	-	-	-	-
	Previous	-	-	-	-	-	-	-	-
Cylinder High	Current	-	-	-	-	-	-	-	-
	Previous	-	-	-	-	-	-	-	-
Device/Head		1	1	1	D	-	-	-	-
Command		0	0	1	0	0	1	1	1

Command Block Command Input									
Register		7	6	5	4	3	2	1	0
Data Low		-	-	-	-	-	-	-	-
Data High		-	-	-	-	-	-	-	-
Error		…See Below…							
Sector Count	HOB=0	-	-	-	-	-	-	-	-
	HOB=1	-	-	-	-	-	-	-	-
Sector Number	HOB=0	V	V	V	V	V	V	V	V
	HOB=1	V	V	V	V	V	V	V	V
Cylinder Low	HOB=0	V	V	V	V	V	V	V	V
	HOB=1	V	V	V	V	V	V	V	V
Cylinder High	HOB=0	V	V	V	V	V	V	V	V
	HOB=1	V	V	V	V	V	V	V	V
Device/Head		-	-	-	-	-	-	-	-
Status		…See Below…							

Error Register							
7	6	5	4	3	2	1	0
CRC	UNC	0	IDN	0	ABT	T0N	AMN
0	0	0	0	0	V	0	0

Status Register							
7	6	5	4	3	2	1	0
BSY	RDY	DF	DSC	DRQ	COR	IDX	ERR
0	V	0	-	-	0	-	V

Input Parameters From The Device

Sector Number (HOB=0) LBA (7:0) of the address of the Native max address.

Sector Number (HOB=1) LBA (31:24) of the address of the Native max address.

Cylinder Low (HOB=0) LBA (15:8) of the address of the Native max address.

Cylinder Low (HOB=1) LBA (39:32) of the address of the Native max address.

Cylinder High (HOB=0) LBA (23:16) of the address of the Native max address.

Cylinder High (HOB=1) LBA (47:40) of the address of the Native max address.

12.31 Read Sector(s) (20h/21h)

The Read Sector(s) command reads one or more sectors of data from disk media, and then transfers the data from the device to the host. The sectors are transferred through the Data Register 16 bits at a time.
If an uncorrectable error occurs, the read will be terminated at the failing sector.

Table 191 Read Sector(s) Command (20h/21h)

Command Input

Field	Description
FEATURE	N/A
COUNT	The number of logical sectors to be transferred. A value of 00h indicates that 256 logical sectors are to be transferred
LBA	LBA of first logical sector to be transferred
DEVICE	**Bit** **Description** 7:5 Obsolete 4 Transport Dependent 3:0 Reserved
Command	7:0 20h or 21h

Normal Outputs

See Normal Outputs in Section 12.9 Flush Cache (E7h)

Error Outputs

See Error Outputs in Section 12.22 Read DMA (C8h/C9h)

12.32 Read Sector(s) Ext (24h)

The Read Sector(s) Ext command reads from 1 to 65,536 sectors of data from disk media, and then transfers the data from the device to the host. The sectors are transferred through the Data Register 16 bits at a time.
If an uncorrectable error occurs, the read will be terminated at the failing sector.

Table 192 Read Sector(s) Ext Command (24h)

Command Input

Field	Description
FEATURE	Reserved
COUNT	The number of logical sectors to be transferred. A value of 0000h indicates that 65,536 logical sectors are to be transferred
LBA	LBA of first logical sector to be transferred
DEVICE	**Bit Description** 7 Obsolete 6 Shall be set to one 5 Obsolete 4 Transport Dependent 3:0 Reserved
Command	7:0 24h

Normal Outputs

See Normal Outputs in Section 12.10 Flush Cache Ext (EAh)

Error Outputs

See Error Outputs in Section 12.28 Read Multiple Ext (29h)

12.33 Read Stream DMA Ext (2Ah)

The Read Stream DMA Ext command reads one to 65536 sectors as specified in the Sector Count register. A value of 0000h in the Sector Count register requests 65536 sectors.

The RC bit indicates that the drive operates in a continuous read mode for the Read Stream command. When RC is cleared to zero the drive shall operate in normal Streaming read mode.

When the Read Continuous mode is enabled, the device shall transfer data of the requested length without setting the ERR bit to one. The SE bit shall be set to one if the data transferred includes errors. The data may be erroneous in this case.

If the Read Continuous bit is set to one, the device shall not stop execution of the command due to errors. If the RC bit is set to one and errors occur in reading or transfer of the data, the device shall continue to transfer the amount of data requested and then provide ending status with the BSY bit cleared to zero, the SE bit set to one, the ERR bit cleared to zero, and the type of error, ICRC, UNC, IDNF or ABRT, reported in the error log. If the RC bit is set to one and the Command Completion Time Limit expires, the device shall stop execution of the command and provide ending status with BSY bit cleared to zero, the SE bit set to one, the ERR bit cleared to zero, and report the fact that the Command Completion Time Limit expired by setting the CCTO bit in the error log to one. In all cases, the device shall attempt to transfer the amount of data requested within the Command Completion Time Limit event if some data transferred is in error.

Table 193 Read Stream DMA Ext Command (2Ah)

Command Block Output Registers									
Register		7	6	5	4	3	2	1	0
Data Low		-	-	-	-	-	-	-	-
Data High		-	-	-	-	-	-	-	-
Feature	Current	V	V	V	V	-	V	V	V
	Previous	V	V	V	V	V	V	V	V
Sector Count	Current	V	V	V	V	V	V	V	V
	Previous	V	V	V	V	V	V	V	V
Sector Number	Current	V	V	V	V	V	V	V	V
	Previous	V	V	V	V	V	V	V	V
Cylinder Low	Current	V	V	V	V	V	V	V	V
	Previous	V	V	V	V	V	V	V	V
Cylinder High	Current	V	V	V	V	V	V	V	V
	Previous	V	V	V	V	V	V	V	V
Device/Head		1	1	1	D	-	-	-	-
Command		0	0	1	0	1	0	1	0

Command Block Input Registers									
Register		7	6	5	4	3	2	1	0
Data Low		-	-	-	-	-	-	-	-
Data High		-	-	-	-	-	-	-	-
Error		…See Below…							
Sector Count	HOB=0	-	-	-	-	-	-	-	-
	HOB=1	-	-	-	-	-	-	-	-
Sector Number	HOB=0	V	V	V	V	V	V	V	V
	HOB=1	V	V	V	V	V	V	V	V
Cylinder Low	HOB=0	V	V	V	V	V	V	V	V
	HOB=1	V	V	V	V	V	V	V	V
Cylinder High	HOB=0	V	V	V	V	V	V	V	V
	HOB=1	V	V	V	V	V	V	V	V
Device/Head		-	-	-	-	-	-	-	-
Status		…See Below…							

Error Register							
7	6	5	4	3	2	1	0
CRC	UNC	0	IDN	0	ABT	T0N	CCTO
V	V	0	V	0	V	0	V

Status Register							
7	6	5	4	3	2	1	0
BSY	RDY	SE	DWE	DRQ	COR	IDX	ERR
0	V	V	0	-	0	-	V

Output Parameters To The Device

Feature Current

URG (bit7)	URG specifies an urgent transfer request. The Urgent bit specifies that the command should be completed in the minimum possible time by the device and shall be completed within the specified Command Completion Time Limit.
RC (bit6)	RC specifies Read Continuous mode enabled. If the Read Continuous bit is set to one, the device shall not stop execution of the command due to errors. If the RC bit is set to one and errors occur in reading or transfer of the data, the device shall continue to transfer the amount of data requested and then provide ending status with BSY bit cleared to zero, the SE bit set to one, the ERR bit cleared to zero, and the type of error, ICRC, UNC, IDNF or ABRT reported in the error log. If the RC bit is set to one and the CCTL expires, the device shall stop execution of the command and provide ending status with the BSY bit cleared to zero, the SE bit set to one, the ERR bit cleared to zero, and report the fact that the CCTL expired by setting the CCTO bit in the error log to one. In all cases, the device shall attempt to transfer the amount of data requested within the CCTL even if some data transferred is in error.
NS (bit5)	NS (Not Sequential) may be set to one if the next read stream command with the same Stream ID may not be sequential in LBA space.
HSE (bit4)	HSE (Handle Stream Error) specifies that this command starts at the LBA of the last reported error for this stream, so the device may attempt to continue its corresponding error recovery sequence where it left off earlier.
Stream ID (bit 0..2)	Stream ID specifies the stream to be read. The device shall operate according to the Stream ID set by the Read Stream command.
Feature Previous	The time allowed for the current command's completion is calculated as follows:
CCTL (7:0)	Command Completion Time Limit = (content of the Feature register Previous) * (Identify Device words (99:98)) microseconds If the value is zero, the device shall use the Default CCTL supplied with a previous Configure Stream command for this Stream ID. If the Default CCTL is zero, or no previous Configure Stream command was defined for this Stream ID, the drive will ignore the CCTL. The time is measured from the write of the command register to the final INTRQ for command completion. The device has minimum CCTL value. When the specified value is shorter than the minimum value, CCTL is set to the minimum value. Actual minimum CCTL value is described in the "Deviations from Standard" section.
Sector Count Current	The number of continuous sectors to be transferred low order, bits (7:0)
Sector Count Previous	The number of continuous sectors to be transferred high order, bits (15:8). If zero is specified in the Sector Count register, then 65,536 sectors will be transferred.
Sector Number Current	LBA (7:0).
Sector Number Previous	LBA (31:24).
Cylinder Low Current	LBA (15:8).
Cylinder Low Previous	LBA (39:32).
Cylinder High Current	LBA (23:16).
Cylinder High Previous	LBA (47:40).

Input Parameters From The Device

Sector Number (HOB=0)	LBA (7:0) of the address of the first unrecoverable error.
Sector Number (HOB=1)	LBA (31:24) of the address of the first unrecoverable error.
Cylinder Low (HOB=0)	LBA (15:8) of the address of the first unrecoverable error.
Cylinder Low (HOB=1)	LBA (39:32) of the address of the first unrecoverable error.
Cylinder High (HOB=0)	LBA (23:16) of the address of the first unrecoverable error.
Cylinder High (HOB=1)	LBA (47:40) of the address of the first unrecoverable error.
CCTO (Error, bit 0)	CCTO bit shall be set to one if a Command Completion Time Limit Out error has occurred.
SE (Status, bit 5)	SE (Stream Error) shall be set to one if an error has occurred during the execution of the command and the RC bit is set to one, In this case the LBA returned in the Sector Number registers shall be the address of the first sector in error, and the Sector Count registers shall contain the number of consecutive sectors that may contain errors. If the RC bit is set to one when the command is issued and ICRC, UNC, IDNF, ABRT, or CCTO error occurs, the SE bit shall be set to one, the ERR bit shall be cleared to zero, and the bits that would normally be set in the Error register shall be set in the error log.

12.34 Read Stream Ext (2Bh)

The Read Stream DMA Ext command reads one to 65536 sectors as specified in the Sector Count register. A value of 0000h in the Sector Count register requests 65536 sectors.

The RC bit indicates that the drive operates in a continuous read mode for the Read Stream command. When RC is cleared to zero the drive shall operate in normal Streaming read mode.

When the Read Continuous mode is enabled, the device shall transfer data of the requested length without setting the ERR bit. The SE bit shall be set to one if the data transferred includes errors. The data may be erroneous in this case.

If the Read Continuous bit is set to one, the device shall not stop execution of the command due to errors. If the RC bit is set to one and errors occur in reading or transfer of the data, the device shall continue to transfer the amount of data requested and then provide ending status with the BSY bit cleared to zero, the SE bit set to one, the ERR bit cleared to zero, and the type of error, ICRC, UNC, IDNF, or ABRT, reported in the error log. If the RC bit is set to one and the Command Completion Time Limit expires, the device shall stop execution of the command and provide ending status with BSY bit cleared to zero, the SE bit set to one, the ERR bit cleared to zero, and report the fact that the Command Completion Time Limit expired by setting the CCTO bit in the error log to one. In all cases, the device shall attempt to transfer the amount of data requested within the Command Completion Time Limit event if some data transferred is in error.

Table 194 Read Stream Ext Command (2Bh)

Command Block Output Registers									
Register		7	6	5	4	3	2	1	0
Data Low		-	-	-	-	-	-	-	-
Data High		-	-	-	-	-	-	-	-
Feature	Current	V	V	V	V	-	V	V	V
	Previous	V	V	V	V	V	V	V	V
Sector Count	Current	V	V	V	V	V	V	V	V
	Previous	V	V	V	V	V	V	V	V
Sector Number	Current	V	V	V	V	V	V	V	V
	Previous	V	V	V	V	V	V	V	V
Cylinder Low	Current	V	V	V	V	V	V	V	V
	Previous	V	V	V	V	V	V	V	V
Cylinder High	Current	V	V	V	V	V	V	V	V
	Previous	V	V	V	V	V	V	V	V
Device/Head		1	1	1	D	-	-	-	-
Command		0	0	1	0	1	0	1	1

Command Block Input Registers									
Register		7	6	5	4	3	2	1	0
Data Low		-	-	-	-	-	-	-	-
Data High		-	-	-	-	-	-	-	-
Error		…See Below…							
Sector Count	HOB=0	-	-	-	-	-	-	-	-
	HOB=1	-	-	-	-	-	-	-	-
Sector Number	HOB=0	V	V	V	V	V	V	V	V
	HOB=1	V	V	V	V	V	V	V	V
Cylinder Low	HOB=0	V	V	V	V	V	V	V	V
	HOB=1	V	V	V	V	V	V	V	V
Cylinder High	HOB=0	V	V	V	V	V	V	V	V
	HOB=1	V	V	V	V	V	V	V	V
Device/Head		-	-	-	-	-	-	-	-
Status		…See Below…							

Error Register							
7	6	5	4	3	2	1	0
CRC	UNC	0	IDN	0	ABT	T0N	CCTO
V	V	0	V	0	V	0	V

Status Register							
7	6	5	4	3	2	1	0
BSY	RDY	SE	DWE	DRQ	COR	IDX	ERR
0	V	V	0	-	0	-	V

Output Parameters To The Device

Feature Current

URG (bit7)	URG specifies an urgent transfer request. The Urgent bit specifies that the command should be completed in the minimum possible time by the device and shall be completed within the specified Command Completion Time Limit.
RC (bit6)	RC specifies Read Continuous mode enabled. If the Read Continuous bit is set to one, the device shall not stop execution of the command due to errors. If the RC bit is set to one and errors occur in reading or transfer of the data, the device shall continue to transfer the amount of data requested and then provide ending status with BSY bit cleared to zero, the SE bit set to one, the ERR bit cleared to zero, and the type of error, UNC, IDNF or ABRT reported in the error log. If the RC bit is set to one and the CCTL expires, the device shall stop execution of the command and provide ending status with the BSY bit cleared to zero, the SE bit set to one, the ERR bit cleared to zero, and report the fact that the CCTL expired by setting the CCTO bit in the error log to one. In all cases, the device shall attempt to transfer the amount of data requested within the CCTL even if some data transferred is in error.
NS (bit5)	NS (Not Sequential) may be set to one if the next read stream command with the same Stream ID may not be sequential in LBA space.
HSE (bit4)	HSE (Handle Stream Error) specifies that this command starts at the LBA of the last reported error for this stream, so the device may attempt to continue its corresponding error recovery sequence where it left off earlier.
Stream ID (bit 0..2)	Stream ID specifies the stream to be read. The device shall operate according to the Stream ID set by the Read Stream command.
Feature Previous	The time allowed for the current command's completion is calculated as follows:
CCTL (7:0)	Command Completion Time Limit = (content of the Feature register Previous)* (Identify Device words (99:98)) microseconds If the value is zero, the device shall use the Default CCTL supplied with a previous Configure Stream command for this Stream ID. If the Default CCTL is zero, or no previous Configure Stream command was defined for this Stream ID, the device will ignore the CCTL. The time is measured from the write of the command register to command completion. The device has minimum CCTL value. When the specified value is shorter than the minimum value, CCTL is set to the minimum value. Actual minimum CCTL value is described in the "Deviations from Standard" section.
Sector Count Current	The number of continuous sectors to be transferred low order, bits (7:0)
Sector Count Previous	The number of continuous sectors to be transferred high order, bits (15:8). If zero is specified in the Sector Count register, then 65,536 sectors will be transferred.
Sector Number Current	LBA (7:0).
Sector Number Previous	LBA (31:24).
Cylinder Low Current	LBA (15:8).
Cylinder Low Previous	LBA (39:32).
Cylinder High Current	LBA (23:16).
Cylinder High Previous	LBA (47:40).

Input Parameters From The Device

Sector Number (HOB=0)	LBA (7:0) of the address of the first unrecoverable error.
Sector Number (HOB=1)	LBA (31:24) of the address of the first unrecoverable error.
Cylinder Low (HOB=0)	LBA (15:8) of the address of the first unrecoverable error.
Cylinder Low (HOB=1)	LBA (39:32) of the address of the first unrecoverable error.
Cylinder High (HOB=0)	LBA (23:16) of the address of the first unrecoverable error.
Cylinder High (HOB=1)	LBA (47:40) of the address of the first unrecoverable error.
CCTO (Error, bit 0)	CCTO bit shall be set to one if a Command Completion Time Limit Out error has occurred.
SE (Status, bit 5)	SE (Stream Error) shall be set to one if an error has occurred during the execution of the command and the RC bit is set to one. In this case the LBA returned in the Sector Number registers shall be the address of the first sector in error, and the Sector Count registers shall contain the number of consecutive sectors that may contain errors. If the RC bit is set to one when the command is issued and a UNC, IDNF, ABRT, or CCTO error occurs, the SE bit shall be set to one, the ERR bit shall be cleared to zero, and the bits that would normally be set in the Error register shall be set in the error log.

12.35 Read Verify Sector(s) (40h/41h)

The Read Verify Sector(s) verifies one or more sectors on the device. No data is transferred to the host.
The difference between Read Sector(s) command and Read Verify Sector(s) command is whether the data is transferred to the host or not.
If an uncorrectable error occurs, the read verify will be terminated at the failing sector.

Table 195 Read Verify Sector(s) Command (40h/41h)

Command Input

Field	Description
FEATURE	N/A
COUNT	The number of logical sectors to be verified. A value of 00h indicates that 256 logical sectors are to be verified
LBA	LBA of first logical sector to be verified
DEVICE	**Bit** **Description** 7:5 Obsolete 4 Transport Dependent 3:0 Reserved
Command	7:0 40h

Normal Outputs

See Normal Outputs in Section 12.9 Flush Cache (E7h)

Error Outputs

See Error Outputs in Section 12.22 Read DMA (C8h/C9h)

.

12.36 Read Verify Sector(s) Ext (42h)

The Read Verify Sector(s) Ext verifies one or more sectors on the device. No data is transferred to the host.
The difference between the Read Sector(s) Ext command and the Read Verify Sector(s) Ext command is whether the data is transferred to the host or not.
If an uncorrectable error occurs, the Read Verify Sector(s) Ext will be terminated at the failing sector.

Table 196 Read Verify Sector(s) Ext Command (42h)

Command Input

Field	Description
FEATURE	N/A
COUNT	The number of logical sectors to be verified. A value of 0000h indicates that 65536 logical sectors are to be verified
LBA	LBA of first logical sector to be verified
DEVICE	**Bit Description** 7 Obsolete 6 Shall be set to one 5 Obsolete 4 Transport Dependent 3:0 Reserved
Command	7:0 42h

Normal Outputs

See Normal Outputs in Section 12.10 Flush Cache Ext (EAh)

Error Outputs

See Error Outputs in Section 12.28 Read Multiple Ext (29h)

12.37 Recalibrate (1xh)

The Recalibrate command moves the read/write heads from anywhere on the disk to cylinder 0.

Table 197 Recalibrate Command (1xh)

Command Block Normal Outputs								
Register	7	6	5	4	3	2	1	0
Data	-	-	-	-	-	-	-	-
Feature	-	-	-	-	-	-	-	-
Sector Count	-	-	-	-	-	-	-	-
Sector Number	-	-	-	-	-	-	-	-
Cylinder Low	-	-	-	-	-	-	-	-
Cylinder High	-	-	-	-	-	-	-	-
Device/Head	1	-	1	D	-	-	-	-
Command	0	0	0	1	-	-	-	-

Command Block Command Input								
Register	7	6	5	4	3	2	1	0
Data	-	-	-	-	-	-	-	-
Error	…See Below…							
Sector Count	-	-	-	-	-	-	-	-
Sector Number	-	-	-	-	-	-	-	-
Cylinder Low	-	-	-	-	-	-	-	-
Cylinder High	-	-	-	-	-	-	-	-
Device/Head	-	-	-	-	-	-	-	-
Status	…See Below…							

Error Register							
7	6	5	4	3	2	1	0
CRC	UNC	0	IDN	0	ABT	T0N	AMN
0	0	0	0	0	V	V	0

Status Register							
7	6	5	4	3	2	1	0
BSY	RDY	DF	DSC	DRQ	COR	IDX	ERR
0	V	0	V	-	0	-	V

If the device cannot reach cylinder 0, T0N (Track 0 Not Found) will be set in the Error Register.

12.38 Receive FPDMA Queued (65h)

Table 198 RECEIVE FPDMA QUEUED command (65h)

Command Block Output Registers									
Register		7	6	5	4	3	2	1	0
Data Low		-	-	-	-	-	-	-	-
Data High		-	-	-	-	-	-	-	-
Feature	Current	V	V	V	V	V	V	V	V
	Previous	-	-	-	-	-	-	-	-
Sector Count	Current	V	V	V	V	V	-	-	-
	Previous	V	V	-	-	-	-	-	-
Sector Number	Current	V	V	V	V	V	-	-	-
	Previous	-	-	-	-	-	-	-	-
Cylinder Low	Current	-	-	-	-	-	-	-	-
	Previous	-	-	-	-	-	-	-	-
Cylinder High	Current	-	-	-	-	-	-	-	-
	Previous	-	-	-	-	-	-	-	-
Device/Head		-	1	-	0	-	-	-	-
Command		0	1	1	0	0	1	0	1

Command Block Input Registers									
Register		7	6	5	4	3	2	1	0
Data Low		-	-	-	-	-	-	-	-
Data High		-	-	-	-	-	-	-	-
Error		...See Below...							
Sector Count	HOB=0	-	-	-	-	-	-	-	-
	HOB=1	-	-	-	-	-	-	-	-
Sector Number	HOB=0	-	-	-	-	-	-	-	-
	HOB=1	-	-	-	-	-	-	-	-
Cylinder Low	HOB=0	-	-	-	-	-	-	-	-
	HOB=1	-	-	-	-	-	-	-	-
Cylinder High	HOB=0	-	-	-	-	-	-	-	-
	HOB=1	-	-	-	-	-	-	-	-
Device/Head		-	-	-	-	-	-	-	-
Status		…See Below…							

Error Register							
7	6	5	4	3	2	1	0
CRC	UNC	0	IDN	0	ABT	T0N	AMN
V	V	0	V	0	V	0	0

Status Register							
7	6	5	4	3	2	1	0
BSY	RDY	DF	DSC	DRQ	COR	IDX	ERR
0	V	0	-	0	-	-	V

The following table defines the RECEIVE FPDMA QUEUED subcommands. See the referenced sections for additional information in this table.

Table 199 RECEIVE FPDMA QUEUED Subcommand Field

Subcommand	Description	Reference
0h	Reserved	-
1h	READ LOG DMA EXT	12.38.1 READ LOG DMA EXT (1h)
2h - Fh	Reserved	-

The output from the host to the device, the command acceptance outputs for this command, the normal outputs for this command and the error outputs for this command are subcommand specific. See Section 12.38.1 READ LOG DMA EXT (1h).

12.38.1 READ LOG DMA EXT (1h)

Table 200 READ LOG DMA EXT Subcommand (1h)

Command Block Output Registers									
Register		7	6	5	4	3	2	1	0
Data Low		-	-	-	-	-	-	-	-
Data High		-	-	-	-	-	-	-	-
Feature	Current	V	V	V	V	0	0	0	1
	Previous	-	-	-	-	-	-	-	-
Sector Count	Current	V	V	V	V	V	-	-	-
	Previous	-	-	-	-	-	-	-	-
Sector Number	Current	V	V	V	V	V	-	-	-
	Previous	-	-	-	-	-	-	-	-
Cylinder Low	Current	-	-	-	-	-	-	-	-
	Previous	-	-	-	-	-	-	-	-
Cylinder High	Current	-	-	-	-	-	-	-	-
	Previous	-	-	-	-	-	-	-	-
Device/Head		-	1	-	0	-	-	-	-
Command		0	1	1	0	0	0	1	1

Command Block Input Registers									
Register		7	6	5	4	3	2	1	0
Data Low		-	-	-	-	-	-	-	-
Data High		-	-	-	-	-	-	-	-
Error		...See Below...							
Sector Count	HOB=0	-	-	-	-	-	-	-	-
	HOB=1	-	-	-	-	-	-	-	-
Sector Number	HOB=0	-	-	-	-	-	-	-	-
	HOB=1	-	-	-	-	-	-	-	-
Cylinder Low	HOB=0	-	-	-	-	-	-	-	-
	HOB=1	-	-	-	-	-	-	-	-
Cylinder High	HOB=0	-	-	-	-	-	-	-	-
	HOB=1	-	-	-	-	-	-	-	-
Device/Head		-	-	-	-	-	-	-	-
Status		…See Below…							

Error Register							
7 CRC	6 UNC	5 0	4 IDN	3 0	2 ABT	1 T0N	0 AMN
V	V	0	V	0	V	0	0

Status Register							
7 BSY	6 RDY	5 DF	4 DSC	3 DRQ	2 COR	1 IDX	0 ERR
0	V	0	-	0	-	-	V

Normal Outputs

Upon successful completion of one or more outstanding commands, the device shall transmit a Set Device Bits FIS with the Interrupt bit set to one and one or more bits set to one in the ACT field corresponding to the bit position for each command TAG that has completed since the last status notification was transmitted.

Error Outputs

If the device has received a command that has not yet been acknowledged by clearing the BSY bit to zero and an error is encountered, the device shall transmit a Register Device to Host FIS.

Output Parameters To The Device

Feature Current Contents of READ LOG DMA EXT Count(7:0) field

Subcommand (bits 4-0) When bits (4:0) is 01h, Read Log DMA Ext Subcommand.

Subcommand Specific (bits 7-4)

Feature Previous Contents of READ LOG DMA EXT Count(15:8) field

Sector Count Current

TAG (bits 7-3)

Sector Count Previous

Sector Number Current Contents of READ LOG DMA EXT LBA(7:0) field

Sector Number Previous Contents of READ LOG DMA EXT LBA(31:24) field

Cylinder Low Current Contents of READ LOG DMA EXT LBA(15:8) field

Cylinder Low Previous Contents of READ LOG DMA EXT LBA(39:32) field

Cylinder High Current Contents of READ LOG DMA EXT LBA(23:16) field

Cylinder High Previous Contents of READ LOG DMA EXT LBA(47:40) field

Device/Head

Input Parameters From The Device
Sector Number (HOB=0)
Sector Number (HOB=1)
Cylinder Low (HOB=0)
Cylinder Low (HOB=1)
Cylinder High (HOB=0)
Cylinder High (HOB=1)

12.39 Remove Element And Truncate - (7Ch)

12.39.1 Feature Set

This 48-bit command is for devices that support the Repurposing Depopulation feature set.

12.39.2 Description

The REMOVE ELEMENT AND TRUNCATE command requests that the device depopulate a storage element and truncate the capacity of the device.

12.39.3 Inputs

Table 201 REMOVE ELEMENT AND TRUNCATE command inputs

Command Inputs

Field	Description
FEATURE	ELEMENT IDENTIFIER field (31:16)
COUNT	ELEMENT IDENTIFIER field (15:0)
LBA	REQUESTED MAX LBA field
DEVICE	**Bit** **Description** 7 Obsolete 6 N/A 5 Obsolete 4 Transport Dependent 3:0 Reserved
COMMAND	7:0 7Ch

12.39.3.1 ELEMENT IDENTIFIER field

The element identifier field specifies the storage element to be depopulated. If the element identifier field specifies an element that is not a storage element (i.e., the PHYSICAL ELEMENT TYPE field (see Section 12.12.6.5.4) is not set to 01h in the corresponding physical element status descriptor) or specifies an element not supported by the device, then the device shall return command aborted with sense key set to ILLEGAL REQUEST and the additional sense code set to INVALID FIELD IN CDB.

If the ELEMENT IDENTIFIER field specifies an element that is depopulated, then the device shall not take any action and the command shall complete without error.

12.39.3.2 REQUESTED MAX LBA field

The REQUESTED MAX LBA field is used to specify the maximum LBA after completion of this command without error.

The REQUESTED MAX LBA field specifies:

- the native max address; and
- the accessible max address.

A value of zero specifies that the device shall choose a single value for the native max address and the accessible max address. A non-zero value specifies that the device shall:

set the native max address and the accessible max address to the specified value; or

return command aborted with the sense key set to ILLEGAL REQUEST and the additional sense code set to INVALID FIELD IN CDB, and not change the native max address or the accessible max address.

The capacity values reported by the IDENTIFY DEVICE command and by the IDENTIFY DEVICE data log.

12.39.3.3 Normal Outputs

This table specifies the Normal Outputs a command returns.

Table 202 Generic Normal Output (No LBA Return Value) for Normal Output

Field	Description
ERROR	N/A
COUNT	N/A
LBA	N/A
DEVICE	**Bit** **Description** 7 Obsolete 6 N/A 5 Obsolete 4 Transport Dependent 3:0 Reserved
STATUS	**Bit** **Description** 7:6 Transport Dependent 5 DEVICE FAULT bit 4 N/A 3 Transport Dependent 2 N/A or ALIGNMENT ERROR bit 1 SENSE DATA AVAILABLE bit 0 ERROR bit

12.39.3.4 Error Outputs

If the SENSE DATA AVAILABLE bit is set to one, then an additional sense code is available to be returned (see SPC-5)

A REMOVE ELEMENT AND TRUNCATE command shall return command aborted with the additional sense code set to LOGICAL UNIT NOT READY, MICROCODE ACTIVATION REQUIRED if the FW ACTIVATION PENDING bit is set to one.

Error Outputs

Field	Description
ERROR	**Bit** **Description** 7:3 N/A 2 ABORT bit 1:0 N/A
COUNT	N/A
LBA	N/A
DEVICE	**Bit** **Description** 7 Obsolete 6 N/A 5 Obsolete 4 Transport Dependent 3:0 Reserved
STATUS	**Bit** **Description** 7:6 Transport Dependent 5 DEVICE FAULT bit 4 N/A 3 Transport Dependent 2 N/A 1 SENSE DATA AVAILABLE bit 0 ERROR bit

If the processing of this command encounters an error that leaves the media in a vendor specific condition in which the device server may not be able to perform logical block access commands, then the device shall return command aborted, with the sense key set to MEDIUM ERROR and the additional sense code set to MEDIUM FORMAT CORRUPTED.

12.40 Report Zones Ext (4Ah/0h)

Table 203 Reset Write Pointer Ext Command (9Fh/04h)

Command Input

Field	Description
FEATURE	**Bit** **Description** 15 PARTIAL bit 14 Reserved 13:8 REPORTING OPTIONS field 7:5 Reserved 4:0 ZM_ACTION field - shall be set to 00h
COUNT	RETURN PAGE COUNT field
LBA	ZONE LOCATOR field
DEVICE	**Bit** **Description** 7 Obsolete 6 Shall be set to one 5 Obsolete 4 Transport Dependent – See ACS-5 3:0 Reserved
Command	7:0 4Ah

12.40.1 PARTIAL bit

The PARTIAL bit modifies the definition of the ZONE LIST LENGTH field.

12.40.2 REPORTING OPTIONS field

The REPORTING OPTIONS field specifies the information to be returned by the Report Zones Ext command.

Table 204 REPORTING OPTIONS field

Code	Description
00h	List all zones in the zoned device
01h	List the zones with a Zone Condition of EMPTY
02h	List the zones with a Zone Condition of IMPLICITLY OPENED
03h	List the zones with a Zone Condition of EXPLICITLY OPENED
04h	List the zones with a Zone Condition of CLOSED
05h	List the zones with a Zone Condition of FULL
06h	List the zones with a Zone Condition of READ ONLY
07h	List the zones with a Zone Condition of OFFLINE
08h	List the zones with a Zone Condition of INACTIVE
09h..0Fh	Reserved
10h	List the zones with RWP Recommended set to true
11h	List the zones with Non-Sequential Write Resources Active set to true
12h..3Eh	Reserved
3Fh	List the zones with a Zone Condition of NOT WRITE POINTER

12.40.3 ZONE LOCATOR field

The ZONE LOCATOR field should specify the lowest LBA of the first zone to be reported.

If the ZONE LOCATOR field does not specify the lowest LBA of a zone, then the first zone to be reported is:
a) the zone that contains the LBA specified by the ZONE LOCATOR field, if that zone meets the criteria specified by the reporting options field (see Section12.40.2)
or
b) the first zone, if any, that:
   A) meets the criteria specified by the REPORTING OPTIONS field; and
   B) has a zone ID that is greater than the value in the ZONE LOCATOR field.

A ZONE LOCATOR field that contains an address that is greater than the zoned maximum address shall be processed as an address outside of the range of user addressable LBAs as described in ACS-5 with the additional sense code set to LOGICAL BLOCK ADDRESS OUT OF RANGE (see Section 13).

Normal Outputs

See Normal Outputs in Section12.9 Flush Cache (E7h)

Error Outputs

See Error Outputs in Section 12.5 Download Microcode (92h)

12.40.4 Input From the Device to the Host Data Structure

The format of the data input from the device to the host includes a header and a zone descriptors.

Table 205 Report Zones Ext input from device to host

Offset	Type	Description
0..3	DWord	ZONE LIST LENGTH field
4	Byte	**Bits** **Description** 7:4 Reserved 3:0 SAME field
5..7		Reserved
8..15	QWord	**Bits** **Description** 63:48 Reserved 47:0 MAXIMUM LBA field
16..63		Reserved
64..127	Bytes	Zone descriptor 0
128..191	Bytes	Zone descriptor 1
…		…
s-63..s	Bytes	Zone descriptor N (N is the number of zone descriptors minus one)
s+1..(512 x pc-1)	Bytes	Padding

12.40.4.1 ZONE LIST LENGTH field

The ZONE LIST LENGTH field contains the length in bytes of the zone descriptors list (i.e., bytes 63..s in Table 205). Based on the value of the PARTIAL bit, the zone descriptors in the zone descriptors list are all of the zone descriptors or a subset of all the zone descriptors associated with each zone specified by the REPORTING OPTIONS field that includes an LBA that is greater than or equal to the LBA specified by the ZONE LOCATOR field.

If the PARTIAL bit (see Section 12.40.1) is:
a) cleared to zero, then the ZONE LIST LENGTH field shall:
   A) contain the length in bytes of the zone descriptors list (i.e., s–63)
   and

B) not be altered based on the RETURN PAGE COUNT field (see Section 12.40);

or

b) set to one, then the ZONE LIST LENGTH field shall contain the lesser of:

A) 64 multiplied by the number of zones that:

a) include a lowest LBA that is greater than or equal to the lowest LBA of the zone specified by the ZONE LOCATOR field

and

b) match the criteria specified by the REPORTING OPTIONS field;

or

B) (contents of the RETURN PAGE COUNT field x 512) – 64.

The zone list length is the number of zones reported multiplied by 64.

12.40.4.2 SAME field

The SAME field (see Table 206) indicates same zone type and same zone length relationships between the zone described by zone descriptor 0 (see Table 205) and the zones described by the other zone descriptors in the zone descriptors list in the input from the device to the host. If the ZONE LIST LENGTH field is zero then the SAME field is invalid and should be ignored by the host.

Table 206 SAME field

Code	Description
0h	The zone type and zone length in each zone descriptor in the zone descriptors list may be different.
1h	The zone type and zone length in each zone descriptor in the zone descriptors list are equal to the zone type and zone length indicated by zone descriptor 0.
2h	The zone type in each zone descriptor in the zone descriptors list is equal to the zone type indicated by zone descriptor 0. The zone length of each zone except the last zone is equal to the zone length indicated by zone descriptor 0. The zone length of the last zone is different than the zone length of the other zones.
3h	Obsolete
4h	The zone type in each zone descriptor may be different. The zone length of each zone is equal to the zone length indicated by zone descriptor 0.
All others	Reserved

12.40.4.3 MAXIMUM LBA field

The MAXIMUM LBA field indicates the LBA of the last logical sector on the device, including all logical sectors in all zones.

12.40.4.4 Zone descriptor format

The zone descriptors list contains zone descriptors that shall be sorted in ascending order based on the lowest LBA of each zone. Each zone descriptor (see Table 207) describes one zone. A nonzero value in the SAME field indicates which fields in which descriptors contain a value that is the same as the equivalent value in zone descriptor 0.

If the PARTIAL bit is cleared to zero, there is one zone descriptor for each zone with:

a) a lowest LBA that is greater than or equal to the lowest LBA of the zone specified by the ZONE LOCATOR field and

b) attributes that match those specified by the REPORTING OPTIONS field.

Table 207 Zone descriptor format

Offset	Type	Description
0	Byte	**Bits** **Description** 7:4 Reserved 3:0 ZONE TYPE field
1	Byte	**Bits** **Description** 7:4 ZONE CONDITION field 3:2 Reserved 1 NON_SEQ bit 0 RESET bit
2..7	Bytes	Reserved
8..15	QWord	**Bits** **Description** 63:48 Reserved 47:0 ZONE LENGTH field
16..23	QWord	**Bits** **Description** 63:48 Reserved 47:0 ZONE START LBA field
24..31	QWord	**Bits** **Description** 63:48 Reserved 47:0 WRITE POINTER LBA field
32..64		Reserved

12.40.4.4.1 ZONE TYPE Field

Table 208 ZONE TYPE field

Code	Description
0h	Reserved
1h	CONVENTIONAL
2h	SEQUENTIAL WRITE REQUIRED
3h..Fh	Reserved

12.40.4.4.2 ZONE CONDITION field

The ZONE CONDITION field indicates the Zone Condition

Table 209 ZONE CONDITION field

Code	Description
0h	NOT WRITE POINTER
1h	EMPTY
2h	IMPLICITLY OPENED
3h	EXPLICITLY OPENED
4h	CLOSED
5h	INACTIVE
6h..Ch	Reserved
Dh	READ ONLY
Eh	FULL
Fh	OFFLINE

12.40.4.4.3 NON_SEQ bit

The value of the non-sequential (NON_SEQ) bit is based on the Non-Sequential Write Resources Active zone attribute. If Non-Sequential Write Resources Active is:

a) false, then the NON_SEQ bit shall be cleared to zero

or

b) true, then the NON_SEQ bit shall be set to one.

12.40.4.4.4 RESET bit

The value of the RESET bit is based on the RWP Recommended zone attribute. If RWP Recommended is:

a) false, then the RESET bit shall be cleared to zero

or

b) true, then the RESET bit shall be set to one.

12.40.4.4.5 ZONE LENGTH field

The ZONE LENGTH field indicates the number of logical sectors in the zone described by this zone descriptor.

12.40.4.4.6 ZONE START LBA field

The ZONE START LBA field indicates the lowest LBA in the zone described by this zone descriptor.

12.40.4.4.7 WRITE POINTER LBA field

The WRITE POINTER LBA field indicates the starting LBA that the host should specify in the next write command associated with the zone described by this zone descriptor.

The host should ignore the contents of the WRITE POINTER LBA field if the Zone Condition indicates that the write pointer is invalid.

12.41 Request Sense Data Ext (0Bh)

The Request Sense Data Ext command allows devices to report additional error or non-error informational status. When sense data is available, the sense key (K), additional sense code (C), and additional sense code qualifier (Q) fields are set to values (refer 13).

The default reporting for the Sense Data Reporting feature set is enabled.
The device maintains only the most recent sense data. If more than one reportable event has occurred before the host issues a command, then the device returns the most recent sense data.
The sense data stops being available to be returned by this command after:

a) receiving any reset;
b) acceptance of a command other than Request Sense Data Ext command that does not read the NCQ Command Error log; or
c) completion of a Request Sense Data Ext command.

Sense data contains:

a) current information sense data (i.e., with the DEFERRED ERROR bit cleared to zero); or
b) deferred error sense data (i.e., with the DEFERRED ERROR bit set to one).

Current information sense data is sense data associated with the command for which the device has:

a) returned command completion with an error; and
b) set the SENSE DATA AVAILABLE bit to one.

Deferred error sense data is sense data not associated with the command for which the device has:

a) returned command completion with an error; and
b) set the SENSE DATA AVAILABLE bit to one.

Deferred error sense data is sense data:

a) for a previous command for which the device returned command completion without an error; or
b) associated with:
   A) multiple commands for which the device returned command completion without an error; or
   B) no specific command.

Table 210 Request Sense Data Ext command (0Bh)

Command Input

Field	Description
FEATURE	Reserved
COUNT	Reserved
LBA	Reserved
DEVICE	**Bit** **Description** 7:5 Obsolete 4 Transport Dependent 3:0 Reserved
Command	7:0 0Bh

Normal Outputs

Field	Description
ERROR	Reserved
COUNT	Reserved
LBA	**Bit** **Description** 47:24 Vendor Specific 23:21 Reserved 20 DEFERRED ERROR bit 0= Current information 1 = Deferred error 19:16 SENSE KEY field 15:8 ADDITIONAL SENSE CODE field 7:0 ADDITIONAL SENSE CODE QUALIFIER field
DEVICE	**Bit** **Description** 7 Obsolete 6 N/A 5 Obsolete 4 Transport Dependent 3:0 Reserved
STATUS	**Bit** **Description** 7:6 Transport Dependent 5:2 Reserved 1 SENSE DATA AVAILABLE bit 0 ERROR bit

Error Outputs

See Error Outputs in Section 12.14 Idle (E3h / 97h)

12.42 Reset Write Pointer Ext (9Fh/04h)

This 48-bit command is for devices that support the Host Managed Zones feature set.

The Reset Write Pointer Ext command requests that one or more Reset Write Pointer functions be performed.
The Reset Write Pointer Ext command uses the Non-Data ZAC Management Out command template and is able to use the template's NCQ encapsulation capability.

The RESET WRITE POINTER EXT command clears pseudo unrecovered attribute (see 12.64) of all logical sectors contained in the zone.

Table 211 Reset Write Pointer Ext Command (9Fh/04h)

Command Input

Field	Description
FEATURE	**Bit** **Description** 15:9 Reserved 8 ALL bit – See Section 5.2.4.3.2 7:5 Reserved 4:0 ZM_ACTION field - shall be set to 04h
COUNT	ZONE COUNT field
LBA	ZONE ID field
DEVICE	**Bit** **Description** 7 Obsolete 6 Shall be set to one 5 Obsolete 4 Transport Dependent – See ACS-5 3:0 Reserved
Command	7:0 9Fh

12.42.1 RESET ALL bit

If the ALL bit is:

a) cleared to zero, then a zone range is specified using other command inputs; and
b) set to one, with the ZONE COUNT field:
   A) not cleared to zero, then the device shall return command completion with an error, with the additional sense code set to INVALID FIELD IN CDB (see ACS-5); and
   B) cleared to zero, then:
      i. the ZONE ID field is ignored; and
      ii. all zones on the device are specified as the command inputs.

12.42.2 ZONE COUNT field

The ZONE COUNT field specifies the number of logically contiguous zones that the device is requested to process, starting with the zone specified by the ZONE ID field.
A ZONE COUNT field cleared to zero or set to one specifies a zone range that contains only one zone.

12.42.3 ZONE ID field

The ZONE ID field specifies the lowest LBA of the write pointer zone for which the device is requested to process the command specified by the ZM_ACTION field and the COMMAND field.

12.42.4 Reset Write Pointer Ext command processing

If the device has not returned command completion with an error (see Section 5.2.4.3.3) for the Reset Write Pointer Ext command, then the device processes the command as shown in the following table.

Table 212 Reset Write Pointer Ext command processing

ALL bit	ZONE COUNT field	Description
zero	zero or more	If the specified zone has a Zone Condition of: a) IMPLICITLY OPENED, EXPLICITLY OPENED or CLOSED, then the device shall perform a Reset Write Pointer function on the specified zone and b) EMPTY, then the device shall make no changes in the Zone Condition and shall return command completion without error.
	two or more	For each zone in the specified zone range that has a Zone Condition of IMPLICITLY OPENED, EXPLICITLY OPENED, CLOSED or FULL, the device server shall perform a Reset Write Pointer function.
one	zero	The device server shall perform a perform a Reset Write Pointer function for each zone with: a) a Zone Condition of IMPLICITLY OPENED, EXPLICITLY OPENED, CLOSED or FULL
	non-zero	See Section 12.42.1

Normal Outputs

See Normal Outputs in Section 12.9 Flush Cache (E7h)

Error Outputs

See Error Outputs in Section 12.5 Download Microcode (92h)

12.43 Restore Elements and Rebuild (7Dh)

12.43.1 Feature Set

This 48-bit command is for devices that support the Storage Element Depopulation feature set.

12.43.2 Description

The RESTORE ELEMENTS AND REBUILD command requests that the device restore previously depopulated storage elements and rebuild the capacity of the device.

12.43.3 Inputs

Table 213 RESTORE ELEMENTS AND REBUILD command inputs

Field	Description
FEATURE	Reserved
COUNT	Reserved
LBA	Reserved
DEVICE	**Bit** **Description** 7 Obsolete 6 Reserved 5 Obsolete 4 Transport Dependent 3:0 Reserved
COMMAND	7:0 7Dh

12.43.3.1 Normal Outputs

For a RESTORE ELEMENTS AND REBUILD command, the device shall return command completion without error if:

a) the device has no depopulated storage elements; or

b) at least one depopulated storage element has the RESTORATION ALLOWED bit set to one (see Section 12.12.6.5.3).

Table 214 Restore Physical Elements Normal Output

Field	Description
ERROR	Reserved
COUNT	DEPOPULATED BEFORE PROCESSING field (15:0) – the number of physical elements that were depopulated before processing of the RESTORE ELEMENTS AND REBUILD command was started
LBA	**Bit** **Description** 47:32 DEPOPULATED BEFORE PROCESSING field (31:16) – the number of physical elements that were depopulated before processing of the RESTORE ELEMENTS AND REBUILD command was started 31:0 DEPOPULATED AFTER PROCESSING field – the number of physical elements that are depopulated after processing of the RESTORE ELEMENTS AND REBUILD command has completed
DEVICE	**Bit** **Description** 7 Obsolete 6 N/A 5 Obsolete 4 Transport Dependent 3:0 Reserved
STATUS	**Bit** **Description** 7:6 Transport Dependent 5 DEVICE FAULT bit 4 N/A 3 Transport Dependent 2 N/A 1 SENSE DATA AVAILABLE bit 0 ERROR bit

12.43.3.2 Error Outputs

A RESTORE ELEMENTS AND REBUILD command shall be terminated with an error with the additional sense code set to COMMAND SEQUENCE ERROR if:

a) the device has at least one depopulated storage element; and
b) all depopulated storage elements have the RESTORATION ALLOWED bit cleared to zero (see Section 12.12.6.5.3)

A RESTORE ELEMENTS AND REBUILD command shall return command aborted with the additional sense code set to LOGICAL UNIT NOT READY, MICROCODE ACTIVATION REQUIRED if the FW ACTIVATION PENDING bit is set to one.

If the SENSE DATA AVAILABLE bit is set to one, then an additional sense code is available to be returned (see SPC-5).

Error Outputs

Field	Description	
ERROR	**Bit**	**Description**
	7:3	N/A
	2	ABORT bit
	1:0	N/A
COUNT	N/A	
LBA	N/A	
DEVICE	**Bit**	**Description**
	7	Obsolete
	6	N/A
	5	Obsolete
	4	Transport Dependent
	3:0	Reserved
STATUS	**Bit**	**Description**
	7:6	Transport Dependent
	5	DEVICE FAULT bit
	4	N/A
	3	Transport Dependent
	2	N/A
	1	SENSE DATA AVAILABLE bit
	0	ERROR bit

12.44 Sanitize Device Feature Set (B4h)

The Sanitize Device feature set allows the host to request that the device modifies the content of all user data areas in a way that results in previously existing data to become unretrievable. Sanitize operations are initiated using one of the sanitize operation commands.

12.44.1 Sanitize Status Ext Command (feature: 0000h)

Table 215 Sanitize Status Ext Command (B4h/0000h)

Command Input

Field	Description
FEATURE	0000h
COUNT	Reserved
LBA	**Bit** **Description** 47:32 Reserved 31:0 shall be set to 4672_4C6Bh (DWord)
DEVICE	**Bit** **Description** 7 Obsolete 6 N/A 5 Obsolete 4 Transport Dependent 3:0 Reserved
Command	7:0 B4h

12.44.1.1 CLEAR SANITIZE OPERATION FAILED bit

The element identifier field specifies the storage element to be depopulated. If the element identifier field specifies an element that is not a storage element (i.e., the PHYSICAL ELEMENT TYPE field (see Section 12.12.6.5.4) is not set to 01h in the corresponding physical element status descriptor) or specifies an element not supported by the device, then the device shall return command aborted with sense key set to ILLEGAL REQUEST and the additional sense code set to INVALID FIELD IN CDB.

Normal Outputs
See Normal Outputs in Section 12.44.2

Error Outputs
See Error Outputs in Section 12.44.2

The SANITIZE STATUS EXT command returns information about current or previously completed sanitizes operations. This includes:

a) progress indication on a current sanitize operation
b) whether a previous sanitize operation completed successfully or unsuccessfully
c) if an unsupported sanitize device command was received.

The SANITIZE STATUS EXT command is valid in every state of the Sanitize Device state machine.

Error Output
After the sanitize operation has completed, if any physical sector that is available to be allocated for user data was not successfully sanitized, then this command returns the ABORT bit set to one.

12.44.2 Crypto Scramble Ext Command (feature: 0011h) (data encryption model only)

The CRYPTO SCRAMBLE EXT command starts a crypto scramble sanitize operation (i.e., a sanitize operation that changes the internal encryption keys that are used for user data) causing the user data to become unretrievable.

The CRYPTO SCRAMBLE EXT command shall only be reported as supported if all user data is affected by changing internal encryption keys.

After a successful crypto scramble sanitize operation, the contents of the user data area may be indeterminate.

Table 216 Crypto Scramble Ext Command (B4h/0011h) (data encryption model only)

Command Input

Field	Description
FEATURE	0011h
COUNT	**Bit** **Description** 15 ZONED NO RESET bit 14:5 Reserved 4 FAILURE MODE bit 3:0 Reserved
LBA	**Bit** **Description** 47:32 Reserved 31:0 shall be set to 4372_7970h (DWord)
DEVICE	**Bit** **Description** 7 Obsolete 6 N/A 5 Obsolete 4 Transport Dependent 3:0 Reserved
Command	7:0 B4h

Normal Outputs

Field	Description
ERROR	Reserved
COUNT	**Bit** **Description** 15 SANITIZE OPERATION COMPLETED WITHOUT ERROR bit – the contents of the Sanitize Operation Completed Without Error value 14 1 = the device is in the SD2: Sanitize Operation In Progress state 0 = the device is not in the SD2: Sanitize Operation In Progress state 13 1 = the device is in the SD1: Sanitize Frozen state 0 = the device is not in the SD1: Sanitize Frozen state 12 SANITIZE ANTIFREEZE bit – the contents of the Sanitize Antifreeze value 11:0 Reserved
LBA	**Bit** **Description** 47:16 Reserved 15:0 SANITIZE PROGRESS INDICATION field – This value indicates the fraction complete of the sanitize operation while the device is in the SD2: Sanitize Operation In Progress state. The value is a numerator that has 65536 (1_0000h) as its denominator. This value shall be set to FFFFh if the device is not in the SD2: Sanitize Operation In Progress state (i.e., a sanitize operation is not in process).
DEVICE	**Bit** **Description** 7 Obsolete 6 N/A 5 Obsolete 4 Transport Dependent 3:0 Reserved
STATUS	**Bit Description** 7:6 Transport Dependent. 5 DEVICE FAULT bit 4 N/A 3 Transport Dependent 2 N/A 1 SENSE DATA AVAILABLE bit 0 ERROR bit

Error Outputs

Field	Description
ERROR	**Bit, Description** 7:3, Reserved 2, ABORT bit 1:0, Reserved
COUNT	Reserved.
LBA	**Bit Description** 47:8 Reserved 7:0 SANITIZE DEVICE ERROR REASON field Value Description 00h Reason not reported or sanitize device command failed 01h Sanitize Command Unsuccessful – The sanitize operation completed with physical sectors that are available to be allocated for user data that were not successfully sanitized. 02h Invalid or unsupported value in the Sanitize Device FEATURE field 03h Device is in the SD1: Sanitize Frozen state 04h SANITIZE FREEZE LOCK command failed as a result of the Sanitize Antifreeze Lock value being set to one 05h..FFh Reserved
DEVICE	**Bit Description** 7 Obsolete 6 N/A 5 Obsolete 4 Transport Dependent 3:0 Reserved
STATUS	**Bit Description** 7:6 Transport Dependent 5 DEVICE FAULT bit 4 N/A 3 Transport Dependent 2 N/A 1 SENSE DATA AVAILABLE bit 0 ERROR bit

The CRYPTO SCRAMBLE EXT command is only supported by data encryption model.
The CRYPTO SCRAMBLE EXT command starts a crypto scramble operation (i.e., a sanitize operation that changes the internal encryption keys that are used for user data) causing the user data to become irretrievable.
After a successful crypto scramble operation, the contents of the user data area may be indeterminate.
The CRYPTO SCRAMBLE EXT command only is processed if:

a) the Sanitize Device feature set is supported
b) the device is in the SD0: Sanitize Idle state, the SD3: Sanitize Operation Failed state, or the SD4: Sanitize Operation Succeeded state.

The ZONED NO RESET bit is only applicable on Zoned devices.

The FAILURE MODE bit

1: the device may exit the SD3: Sanitize Operation Failed state with successful processing of a SANITIZE STATUS EXT command.
0: the SD3: Sanitize Operation Failed state returns command aborted for sanitize operations with the FAILURE MODE bit set to one until the device returns to the SD1: Sanitize Idle state.

Sanitize Operation Completed Without Error.

1: the Sanitize Device state machine enters SD4: Sanitize Operation Succeeded.
0: the Sanitize Device state machine enters SD2: Sanitize Operation. The value of this bit is maintained across power-on resets.

The Sanitize Progress Indication (15:8).
Progress indicator for the current sanitizes operation when the Sanitize Device state machine is in the SD2: Sanitize Operation state. This value is FFFFh if the Sanitize Device state machine is not in the
SD2: Sanitize Operation state (i.e., a sanitize operation is not in process). The returned value is a numerator that has 65,536 (10000h) as its denominator

Error Output
The ABORT bit is set to one if a SANITIZE DEVICE FREEZE LOCK EXT command has successfully completed since the last power-on reset.
The device returns command aborted if:

a) the device is in the SD3:Sanitize Operation Failed state
b) the completed sanitize command (i.e., CRYPTO SCRAMBLE EXT, or OVERWRITE EXT) specified the FAILURE MODE bit cleared to zero; and
c) a CRYPTO SCRAMPLE EXT command with the FAILURE MODE bit set to one is received.

Sanitize Device Error (7:0)

00h Reason not reported
01h Sanitize Command Unsuccessful. The sanitize operation completed with physical sectors that are available to be allocated for user data that were not successfully sanitized.
02h Invalid or unsupported Sanitize Device Feature Field Value
03h Device is in the Sanitize Frozen state
04h..FFh Reserved

12.44.3 Overwrite Ext Command (feature: 0014h)

The OVERWRITE EXT command starts an overwrite sanitize operation (i.e., a sanitize operation to overwrite the internal media with a constant value) that fills physical sectors within the Sanitize operation scope with a four byte pattern specified by the OVERWRITE PATTERN field of the command.

The host also specifies a count for multiple overwrites and whether to invert the four byte pattern between consecutive overwrite passes.

After a successful overwrite sanitize operation, affected data blocks shall be readable without error.

Table 217 Overwrite Ext Command (B4h/0014h)

Command Input

Field	Description
FEATURE	0014h
COUNT	**Bit** **Description** 15 ZONED NO RESET bit 14:8 Reserved 7 INVERT PATTERN BETWEEN OVERWRITE PASSES bit 6 DEFINITIVE ENDING PATTERN bit 5 Reserved 4 FAILURE MODE bit 3:0 OVERWRITE PASS COUNT field
LBA	**Bit** **Description** 47:32 shall be set to 4F57h (word) 31:0 OVERWRITE PATTERN field (DWord)
DEVICE	**Bit** **Description** 7 Obsolete 6 N/A 5 Obsolete 4 Transport Dependent 3:0 Reserved
Command	7:0 B4h

Normal Outputs
See Normal Outputs in Section 12.44.2.

Error Outputs
See Error Outputs in Section 12.44.2.

12.44.4 Sanitize Freeze Lock Ext Command (feature: 0020h)

The SANITIZE FREEZE LOCK EXT command sets the Sanitize Device state machine to the SD1: Sanitize Frozen state. After command completion all sanitize commands other than SANITIZE STATUS EXT command returns command aborted. The Sanitize Device state machine transitions from the SD1: Sanitize Frozen state to the SD0: Sanitize Idle state after a power-on reset or hardware reset.

The ABORT bit is set to one if a SANITIZE DEVICE FREEZE LOCK EXT command has successfully completed since the last power-on reset.
The device returns command aborted if:

a) the device is in the SD3:Sanitize Operation Failed state
b) the completed sanitize command (i.e., CRYPTO SCRAMBLE EXT (data encryption model only), or OVERWRITE EXT) contained the FAILURE MODE bit cleared to zero
c) an OVERWRITE EXT command with the FAILURE MODE bit set to one is received.

Table 218 Sanitize Freeze Lock Ext Command (B4h/0020h)

Command Input

Field	**Description**
FEATURE	0020h
COUNT	Reserved
LBA	**Bit** **Description** 47:32 Reserved 31:0 shall be set to 4672_4C6Bh (DWord)
DEVICE	**Bit** **Description** 7 Obsolete 6 N/A 5 Obsolete 4 Transport Dependent 3:0 Reserved
Command	7:0 B4h

Normal Outputs
See Normal Outputs in Section 12.44.2.

Error Outputs
See Error Outputs in Section12.44.2.

12.44.5 Sanitize Antifreeze Lock Ext Command (feature: 0040h)

The SANITIZE ANTIFREEZE LOCK EXT command requests that all subsequent SANITIZE FREEZE LOCK EXT commands (see Section 12.44.4) return command aborted until the device clears the Sanitize Antifreeze value to zero. If a SANITIZE ANTIFREEZE LOCK EXT command returns command completion without error, the device sets the Sanitize Antifreeze value to one

Table 219 Sanitize Antifreeze Lock Ext Command (B4h/0040h)

Command Input

Field	Description
FEATURE	0040h
COUNT	Reserved
LBA	**Bit** **Description** 47:32 Reserved 31:0 shall be set to 416E_7469h (DWord)
DEVICE	**Bit** **Description** 7 Obsolete 6 N/A 5 Obsolete 4 Transport Dependent 3:0 Reserved
Command	7:0 B4h

Normal Outputs

If the SENSE DATA AVAILABLE bit is set to one, then an additional sense code is available to be returned (see SPC-5).

Error Outputs

See Error Outputs in Section Crypto Scramble Ext Command (feature: 0011h) (data encryption model only).

12.45 Security Disable Password (F6h)

The Security Disable Password command disables the security mode feature (device lock function).
The Security Disable Password command requests a transfer of a single sector of data from the host including information specified in Section 12.37. Then the device checks the transferred password. If the User Password or Master Password matches the given password, the device disables the security mode feature (device lock function). This command does not change the Master Password which may be re-activated later by setting User Password. This command should be executed in device unlock mode.

Table 220 Security Disable Password Command (F6h)

Command Input

Field	Description
FEATURE	N/A
COUNT	N/A
LBA	N/A
DEVICE	**Bit** **Description** 7 Obsolete 6 N/A 5 Obsolete 4 Transport Dependent 3:0 Reserved
Command	7:0 F6h

When security is disabled and the Identifier bit is set to User, then the device shall return command aborted.

Table 221 Password Information for Security Disable Password command

Word	Description	
00	Control word	
	bit 0	: Identifier (1-Master, 0-User)
	bit 1-15	: Reserved
01-16	Password	(32 bytes)
17-255	Reserved	

The device will compare the password sent from this host with that specified in the control word.

Identifier Zero indicates that the device should check the supplied password against the user password stored internally. One indicates that the device should check the given password against the master password stored internally.

Normal Outputs

See Normal Outputs in Section 12.9 Flush Cache (E7h)

Error Outputs

See Error Outputs in Section 12.5 Download Microcode (92h)

12.46 Security Erase Prepare (F3h)

The Security Erase Prepare Command must be issued immediately before the Security Erase Unit Command to enable device erasing and unlocking.
The Security Erase Prepare Command must be issued immediately before the Format Unit Command. This command is to prevent accidental erasure of the device.
This command does not request to transfer data.

Table 222 Security Erase Prepare Command (F3h)

Command Input

Field	Description
FEATURE	N/A
COUNT	N/A
LBA	N/A
DEVICE	**Bit** **Description** 7 Obsolete 6 N/A 5 Obsolete 4 Transport Dependent 3:0 Reserved
Command	7:0 F3h

Normal Output
See Normal Outputs in Section 12.9 Flush Cache (E7h)

Error Output
See Error Outputs in Section 12.14 Idle (E3h / 97h)

12.47 Security Erase Unit (F4h)

The Security Erase Unit command initializes all user data sectors, and then disables the device lock function.
Note that the Security Erase Unit command initializes from LBA 0 to Native MAX LBA. Host MAX LBA set by Initialize Drive Parameter, Device Configuration Overlay, or Set MAX Address command is ignored. So the protected area by Set MAX Address command is also initialized.
This command requests to transfer a single sector data from the host including information specified in Table 224. When security is disabled and the Identifier bit is set to User, then the device shall return command aborted. If the password does not match, then the device rejects the command with an Aborted error.

The Security Erase Unit command erases all user data and disables the security mode feature (device lock function). So after completing this command, all user data will be initialized to zero with write operation. At this time, it is not verified with read operation whether the sector of data is initialized correctly. Also, the defective sector information and the reassigned sector information for the device are not updated. The security erase prepare command should be completed immediately prior to the Security Erase Unit command. If the device receives a Security Erase Unit command without a prior Security Erase Prepare command, the device aborts the security erase unit command.

This command disables the security mode feature (device lock function); however, the master password is still stored internally within the device and may be re-activated later when a new user password is set. If you execute this command on disabling the security mode feature (device lock function), the password sent by the host is NOT compared with the password stored in the device for both the Master Password and the User Password, and then the device only erases all user data.
The execution time of this command is set in Word 89 of Identify device information

The device shall return command aborted if:

a) this command was not immediately preceded by a SECURITY ERASE PREPARE command;
b) the ERASE MODE bit was set to one and the device does not support Enhanced Erase mode;
c) the contents of the PASSWORD field do not match the stored password;
d) the PASSWORD field contained an invalid value; or
e) the data area is not successfully overwritten.

device may return command completion with the ERROR bit set to one if an Interface CRC error has occurred.

Table 223 Security Erase Unit Command (F4h)

Command Input

Field	Description
FEATURE	N/A
COUNT	N/A
LBA	N/A
DEVICE	**Bit** **Description** 7 Obsolete 6 N/A 5 Obsolete 4 Transport Dependent 3:0 Reserved
Command	7:0 F4h

Table 224 Erase Unit Information

Word	Description	
00	Control word	
	bit 0	: Identifier (1-Master, 0-User)
	bit 1	: Erase mode (1- Enhanced, 0- Normal) Enhanced mode is not supported
	bit 2-15	: Reserved
01-16	Password	(32 bytes)
17-255	Reserved	

Identifier Zero indicates that the device should check the supplied password against the user password stored internally. One indicates that the device should check the given password against the master password stored internally.

Normal Outputs
See Normal Outputs in Section 12.9 Flush Cache (E7h)

Error Outputs
See Error Outputs in Section 12.5 Download Microcode (92h)

12.48 Security Freeze Lock (F5h)

The Security Freeze Lock Command allows the device to enter frozen mode immediately.
After this command is completed, the command which updates Security Mode Feature (Device Lock Function) is rejected.
Frozen mode is exited only by Power off.
The following commands are rejected when the device is in frozen mode:

- Security Set Password
- Security Unlock
- Security Disable Password
- Security Erase Prepare
- Security Erase Unit

For details, refer to

Table 36

Table 225 Security Freeze Lock Command (F5h)

Command Input

Field	Description
FEATURE	N/A
COUNT	N/A
LBA	N/A
DEVICE	**Bit** **Description** 7 Obsolete 6 N/A 5 Obsolete 4 Transport Dependent 3:0 Reserved
Command	7:0 F5h

Normal Outputs
See Normal Outputs in Section 12.9 Flush Cache (E7h)

Error Outputs
See Error Outputs in Section 12.14 Idle (E3h / 97h)

12.49 Security Set Password (F1h)

The Security Set Password command enables security mode feature (device lock function) and sets the master password or the user password.
The security mode feature (device lock function) is enabled by this command, and the device is not locked immediately. The device is locked after next power on reset. When the MASTER password is set by this command, the master password is registered internally, but the device is NOT locked after next power on reset or hard reset.
This command requests a transfer of a single sector of data from the host including the information specified in the following table.

Table 226 Security Set Password Command (F1h)

Command Input

Field	Description
FEATURE	N/A
COUNT	N/A
LBA	N/A
DEVICE	**Bit** **Description** 7 Obsolete 6 N/A 5 Obsolete 4 Transport Dependent 3:0 Reserved
Command	7:0 F1h

The data transferred controls the function of this command.

Table 227 Security Set Password Information

Word	Description	
00	Control word	
	bit 0	: Identifier (1-Master, 0-User)
	bit 1-7	: Reserved
	bit 8	: Security level (1-Maximum, 0-High)
	bit 9-15	: Reserved
01-16	Password (32 byte)	
17	Master Password Revision Code (valid if Word 0 bit 0 = 1)	
18-255	Reserved	

Identifier Zero indicates that the device regards Password as User Password. One indicates that device regards Password as Master Password.

Security Level Zero indicates High level, one indicates Maximum level. If the host sets High level and the password is forgotten, then the Master Password can be used to unlock the device. If the host sets Maximum level and the user password is forgotten, only a Security Erase Prepare/Security Unit command can unlock the device and all data will be lost.

Password The text of the password – all 32 bytes are always significant.

Master Password Revision Code The revision code field is returned in the IDENTIFY DEVICE Word 92.
The valid revision codes are 0001h through FFFEh. The device accepts the command with a value of 0000h or FFFFh in this field but does not change Master Password Revision code.

The setting of the Identifier and Security level bits interact as follows.
Identifier=User / Security level = High

The password supplied with the command will be saved as the new user password. The security mode feature (lock function) will be enabled from the next power on. The file may then be unlocked by either the user password or the previously set master password.

Identifier=Master / Security level = High
This combination will set a master password but will NOT enable the security mode feature (lock function).

Identifier=User / Security level = Maximum
The password supplied with the command will be saved as the new user password. The security mode feature (lock function) will be enabled from the next power on. The file may then be unlocked by only the user password. The master password previously set is still stored in the file but may NOT be used to unlock the device.

Identifier=Master / Security level = Maximum
This combination will set a master password but will NOT enable the security mode feature (lock function).

Normal Outputs
See Normal Outputs in Section 12.9 Flush Cache (E7h)

Error Outputs
See Error Outputs in Section 12.5 Download Microcode (92h).

12.50 Security Unlock (F2h)

This command unlocks the password and causes the device to enter device unlock mode. If power on reset or hard reset is done without executing the Security Disable Password command after this command is completed, the device will be in device lock mode. The password has not been changed yet.
The Security Unlock command requests to transfer a single sector of data from the host including information specified in the following tables.

Table 228 Security Unlock Command (F2h)

Command Input

Field	Description
FEATURE	N/A
COUNT	N/A
LBA	N/A
DEVICE	**Bit** **Description** 7 Obsolete 6 N/A 5 Obsolete 4 Transport Dependent 3:0 Reserved
Command	7:0 F2h

Table 229 Security Unlock Information

Word	Description	
00	Control word	
	bit 0	: Identifier (1-Master, 0-User)
	bit 1-15	: Reserved
01-16	Password	(32 bytes)
17-255	Reserved	

If the Identifier bit is set to master and the file is in high security mode then the password supplied will be compared with the stored master password. If the file is in maximum security mode then the security unlock will be rejected.
If the Identifier bit is set to user, then the file compares the supplied password with the stored user password.
If the password compare fails, then the device returns an abort error to the host and decrements the unlock attempt counter. This counter is initially set to 5 and is decremented for each password mismatch.
When security is disabled and the Identifier bit is set to User, then the device shall return command aborted.
When this counter reaches zero then all password protected commands are rejected until a hard reset or a power off.

Identifier Zero indicates that device regards Password as User Password. One indicates that device regards Password as Master Password.

The user can detect if the attempt to unlock the device has failed due to a mismatched password as this is the only reason that an abort error will be returned by the file AFTER the password information has been sent to the device. If an abort error is returned by the device BEFORE the password data has been sent to the file then another problem exists.

Normal Outputs

See Normal Outputs in Section 12.9 Flush Cache (E7h)

Error Outputs

See Error Outputs in Section 12.5 Download Microcode (92h)

12.51 Seek (7xh)

The Seek command initiates a seek to the designated track and selects the designated head. The device need not be formatted for a seek to execute properly.

Table 230 Seek Command (7xh)

Command Block Normal Outputs								
Register	7	6	5	4	3	2	1	0
Data	-	-	-	-	-	-	-	-
Feature	-	-	-	-	-	-	-	-
Sector Count	-	-	-	-	-	-	-	-
Sector Number	V	V	V	V	V	V	V	V
Cylinder Low	V	V	V	V	V	V	V	V
Cylinder High	V	V	V	V	V	V	V	V
Device/Head	1	1	1	D	H	H	H	H
Command	0	1	1	1	-	-	-	-

Command Block Command Input								
Register	7	6	5	4	3	2	1	0
Data	-	-	-	-	-	-	-	-
Error	…See Below…							
Sector Count	-	-	-	-	-	-	-	-
Sector Number	V	V	V	V	V	V	V	V
Cylinder Low	V	V	V	V	V	V	V	V
Cylinder High	V	V	V	V	V	V	V	V
Device/Head	-	-	-	-	H	H	H	H
Status	…See Below…							

Error Register							
7	6	5	4	3	2	1	0
CRC	UNC	0	IDN	0	ABT	T0N	AMN
0	0	0	V	0	V	0	0

Status Register							
7	6	5	4	3	2	1	0
BSY	RDY	DF	DSC	DRQ	COR	IDX	ERR
0	V	0	V	-	0	-	V

Output Parameters To The Device

Sector Number This register specifies LBA address bits 0 – 7 for seek.

Cylinder High/Low The cylinder number of the seek.
This register specifies LBA address bits 8 – 15 (Low), 16 – 23 (High) for seek.

H The head number of the seek.
This register specifies LBA address bits 24 – 27 for seek.

Input Parameters From The Device

Sector Number This register contains current LBA bits 0 – 7.

Cylinder High/Low This register contains current LBA bits 8 – 15 (Low), 16 – 23 (High).

H This register contains current LBA bits 24 – 27.

12.52 Send FPDMA Queued (64h)

Table 231 SEND FPDMA QUEUED command (64h)

Command Block Output Registers									
Register		7	6	5	4	3	2	1	0
Data Low		-	-	-	-	-	-	-	-
Data High		-	-	-	-	-	-	-	-
Feature	Current	V	V	V	V	V	V	V	V
	Previous	-	-	-	-	-	-	-	-
Sector Count	Current	V	V	V	V	V	-	-	-
	Previous	V	V	-	-	-	-	-	-
Sector Number	Current	V	V	V	V	V	-	-	-
	Previous	-	-	-	-	-	-	-	-
Cylinder Low	Current	-	-	-	-	-	-	-	-
	Previous	-	-	-	-	-	-	-	-
Cylinder High	Current	-	-	-	-	-	-	-	-
	Previous	-	-	-	-	-	-	-	-
Device/Head		-	1	-	0	-	-	-	-
Command		0	1	1	0	0	1	0	0

Command Block Input Registers									
Register		7	6	5	4	3	2	1	0
Data Low		-	-	-	-	-	-	-	-
Data High		-	-	-	-	-	-	-	-
Error		...See Below...							
Sector Count	HOB=0	-	-	-	-	-	-	-	-
	HOB=1	-	-	-	-	-	-	-	-
Sector Number	HOB=0	-	-	-	-	-	-	-	-
	HOB=1	-	-	-	-	-	-	-	-
Cylinder Low	HOB=0	-	-	-	-	-	-	-	-
	HOB=1	-	-	-	-	-	-	-	-
Cylinder High	HOB=0	-	-	-	-	-	-	-	-
	HOB=1	-	-	-	-	-	-	-	-
Device/Head		-	-	-	-	-	-	-	-
Status		…See Below…							

Error Register							
7	6	5	4	3	2	1	0
CRC	UNC	0	IDN	0	ABT	T0N	AMN
V	V	0	V	0	V	0	0

Status Register							
7	6	5	4	3	2	1	0
BSY	RDY	DF	DSC	DRQ	COR	IDX	ERR
0	V	0	-	0	-	-	V

The output from the host to the device, the command acceptance outputs for this command, the normal outputs for this command and the error outputs for this command are subcommand specific.

12.53 Sense Condition (F0h : Vendor specific)

The Sense Condition command is used to sense temperature in a device.

This command is executable even if a device is in Power up in standby mode.

Table 232 Sense Condition command (F0h)

Command Block Normal Outputs								
Register	7	6	5	4	3	2	1	0
Data	-	-	-	-	-	-	-	-
Feature	0	0	0	0	0	0	0	1
Sector Count	-	-	-	-	-	-	-	-
Sector Number	-	-	-	-	-	-	-	-
Cylinder Low	-	-	-	-	-	-	-	-
Cylinder High	-	-	-	-	-	-	-	-
Device/Head	-	-	-	-	-	-	-	-
Command	1	1	1	1	0	0	0	0

Command Block Command Input								
Register	7	6	5	4	3	2	1	0
Data	-	-	-	-	-	-	-	-
Error	…See Below…							
Sector Count	V	V	V	V	V	V	V	V
Sector Number	-	-	-	-	-	-	-	-
Cylinder Low	-	-	-	-	-	-	-	-
Cylinder High	-	-	-	-	-	-	-	-
Device/Head	-	-	-	-	-	-	-	-
Status	…See Below…							

Error Register							
7	6	5	4	3	2	1	0
CRC	UNC	0	IDN	0	ABT	T0N	AMN
0	0	0	0	0	V	0	0

Status Register							
7	6	5	4	3	2	1	0
BSY	RDY	DF	DSC	DRQ	COR	IDX	ERR
V	V	V	-	V	-	0	V

Output Parameters To The Device

Feature The Feature register must be set to 01h. All other value is rejected with setting ABORT bit in status register.

Input Parameters From The Device

Sector Count The Sector Count register contains result value.

Value	Description
00h	Temperature is equal to or lower than -20 deg C
01h-FEh	Temperature is (Value / 2 - 20) deg C
FFh	Temperature is higher than 107 deg C

12.54 Set Date & Time Ext (77h)

This command sets the Date and Time TimeStamp device statistic (see 12.25.3.2) to the value in the Timestamp field. The host should set the Timestamp field to the current date and time in milliseconds using January 1, 1970 UT 12:00am as the baseline. The Timestamp field has a range from January 1, 1970 to approximately January 1, 10895.

Table 233 Set Date & Time Ext Command (77h)

Command Input

Field	Description
FEATURE	Reserved
COUNT	Reserved
LBA	**Bit** **Description** 47:0 Timestamp Field
DEVICE	**Bit** **Description** 7 Obsolete 6 N/A 5 Obsolete 4 Transport Dependent 3:0 Reserved
Command	7:0 77h

Normal Outputs

See Normal Outputs in Section 12.9 Flush Cache (E7h)

Error Outputs

See Error Outputs in Section 12.14 Idle (E3h / 97h)

12.55 Set Features (EFh)

The Set Feature command is to establish the following parameters which affect the execution of certain features as shown in below table.
ABT will be set to 1 in the Error Register if the Feature register contains any undefined values.

Table 234 Set Features Command (EFh)

Command Input

Field	Description
FEATURE	SET FEATURES SUBCOMMAND field
COUNT	Subcommand specific
LBA	Subcommand specific
DEVICE	**Bit** **Description** 7 Obsolete 6 N/A 5 Obsolete 4 Transport Dependent 3:0 Reserved
Command	7:0 EFh

Normal Outputs
See Normal Outputs in Section 12.9 Flush Cache (E7h)

Error Outputs
See Error Outputs in Section 12.14 Idle (E3h / 97h)

Subcommands code

Feature	Destination code for this command
02h	Enable write cache
03h	Set transfer mode based on value in sector count register
05h	Enable Advanced Power Management
06h	Enable Power-up in Standby feature set
07h	Power-Up In Standby feature set device spin-up
10h	Enable use of Serial ATA feature
43h	Set Maximum Host Interface Sector Time
46h	Zone Activation Control
47h	Zoned URSWRZ Modification
4Ah	Extended Power Conditions
55h	Disable read look-ahead feature
5Bh	Repurposing Depopulation (RDP) feature
5Ch	Write Cache Enabled Data Safety
66h	Disable reverting to power on defaults
82h	Disable write cache
85h	Disable Advanced Power Management
86h	Disable Power-up in Standby mode
90h	Disable use of Serial ATA feature
AAh	Enable read look-ahead feature
C3h	Enable/Disable the Sense Data Reporting feature set
CCh	Enable reverting to power on defaults
E0h	Execute RDP Certification for SATA

Note.

After power on reset or hard reset, the device is set to the following features as default.

Write cache	: Enable
Read look-ahead	: Enable
Reverting to power on defaults	: Disable
Release interrupt	: Disable

12.55.1 Write Cache (02h)

If the number of auto reassigned sector reaches the device's reassignment capacity, the write cache function will be automatically disabled. Although the device still accepts the Set Features command with Feature register = 02h without error, but the write cache function will remain disabled. For current write cache function status, please refer to Identify Device Information (Word 85 or 129) by Identify Device command.

12.55.2 Set Transfer Mode (03h)

When Feature register is 03h (=Set Transfer Mode), the Sector Count Register specifies the transfer mechanism. The upper 5 bits define the type of transfer and the low order 3 bits encode the mode value.

PIO Default Transfer Mode	00000	000	
PIO Default Transfer Mode Disable IORDY	00000	001	
PIO Flow Control Transfer Mode x	00001	nnn	(nnn=000,001,010,011,100)
Multiword DMA mode x	00100	nnn	(nnn=000,001,010)
Ultra DMA mode x	01000	nnn	(nnn=000,001,010,011,100,101,110)

12.55.3 Advanced Power Management (05h)

When the value in the Feature register is 05h (=Enable Advanced Power Management), the Sector Count Register specifies the Advanced Power Management level.

FFh ---	Aborted
C0 – FEh ---	The deepest power saving mode is Idle mode (the same as Disable Advanced Power Management)
80 – BFh ---	The deepest power saving mode is Low power Idle mode
01 – 7Fh ---	The deepest power saving mode is Low RPM Idle mode
00h ---	Aborted

The idle time to Low power idle mode and Low RPM idle mode vary according to the value in Sector Count register as follows:

When Low power idle mode is the deepest power saving mode,

Y_1=(x-80h) * 5+120 [sec] (120<= Y_1<=435)

Y_2=N/A(the device does not go to Low RPM idle mode)

When Low RPM idle mode is the deepest power saving mode and the value in Sector Count register is between 40h and 7Fh,

120<=Y_1<=435 [sec] (default: 120 [sec])

Y_2=(x-40h) * 60 + 600[sec] (600<=Y_2<=4380)

When Low RPM idle mode is the deepest power saving mode and the value in Sector Count register is between 01h and 3Fh,

120<=Y_1<=435 [sec] (default: 120 [sec])

Y_2=600 [sec]

Where x is the value in Sector Count register, y_1 is the idle time to Low Power Idle mode, and y_2 is the idle time to Low RPM idle mode.

If Low power idle mode has already been enabled (i.e., y_1 has been set) before Low RPM idle mode is enabled, y_1 is preserved. If Low power idle mode is disabled (i.e., y_1 has not been set yet), y_1 becomes 120[sec] when Low RPM idle mode is enabled.

Enabled power saving mode and idle time (y_1 and y_2) are preserved until Advanced Power Management is disabled, the deepest power saving mode becomes Idle mode, or new time is set. They are initialized with a hard/soft reset unless Reverting to power on defaults is disabled and the device receives a soft reset.

12.55.4 Serial ATA Feature (10h)

When the Feature register is set to 10h or 90h, the value set to the Sector Count register specifies the specific Serial ATA feature to enable or disable.

Sector Count Value	Description
01h	Non-zero buffer offset in DMA Setup FIS
02h	DMA Setup FIS Auto-Activate optimization
03h	Device-initiated interface power state transitions
04h	Guaranteed In-Order Data Delivery
06h	Software Settings Preservation
09h	Device Sleep
0Bh	Power Disable

12.55.5 Set Maximum Host Interface Sector Time (43h)

Sector Count	Typical PIO Mode Host Interface Sector Time (7:0)
LBA Low	Typical PIO Mode Host Interface Sector Time (15:8)
LBA Mid	Typical DMA Mode Host Interface Sector Time (7:0)
LBA High	Typical DMA Mode Host Interface Sector Time (15:8)

Subcommand code 43h allows the host to inform the device of a host interface rate limitation. The typical Host Interface Sector Times have the same units as Identify Device Word 96 for DMA and Word 104 for PIO. A value of zero indicates that the host interface shall be capable of transferring data at the maximum rate allowed by the selected transfer mode. The Typical PIO Mode Host Interface Sector Time includes the host's interrupt service time.

12.55.6 Zone Activation Control subcommand (46h)

Subcommand code 46h processes the inputs shown in Table 235.
If the value of the SET NUMBER OF ZONES field is:

a) greater than zero; and
b) less than or equal to the value in the MAXIMUM ACTIVATION field (see Section 12.25.17.10),

then the device shall:

a) copy the value in the SET NUMBER OF ZONES field to the SUBSEQUENT NUMBER OF ZONES field; and
b) retain the value across all resets (e.g., power-on reset).

If

a) the ZONE ACTIVATION CONTROL SUPPORTED bit (see Section 12.25.17.10) is cleared to zero; or
b) the value of the SET NUMBER OF ZONES field is:
    A) zero; or
    B) greater than the value in the MAXIMUM ACTIVATION field,

then the device shall return command complete aborted.

Table 235 Zone Activation Control subcommand inputs

Field	Description
Count	Reserved
LBA	SET NUMBER OF ZONES field - specifies the value returned in the SUBSEQUENT NUMBER OF ZONES field in the IDENTIFY DEVICE data log.

12.55.7 Zoned URSWRZ-bit Modification subcommand (47h)

Subcommand code 47h sets the URSWRZ bit (see Section 12.25.17.10.2). The setting is retained across all resets (e.g., power-on reset).

If the UPDATE URSWRZ SUPPORTED bit (see Section 12.25.17.10.5.1 is cleared to zero, then the device shall return command aborted.
If the UPDATE URSWRZ SUPPORTED bit is set to one then the device shall set the URSWRZ bit to the value of the NEW URSWRZ bit as shown in the following table.

Table 236 Update URSWRZ bit subcommand inputs

Field	Description	
Count	**Bit**	**Description**
	15:1	Reserved
	0	NEW URSWRZ bit
LBA	Reserved	

The NEW URSWRZ bit specifies the value that the host requests that the device change the URSWRZ bit to.

12.55.8 Extended Power Conditions (EPC) (4Ah)

12.55.8.1 Restore Power Condition Settings subcommand (0h)

Table 237 Restore Power Condition Settings subcommand

Command Block Normal Outputs								
Register	7	6	5	4	3	2	1	0
Data	-	-	-	-	-	-	-	-
Feature	0	1	0	0	1	0	1	0
Sector Count	V	V	V	V	V	V	V	V
Sector Number	-	V	-	V	0	0	0	0
Cylinder Low	-	-	-	-	-	-	-	-
Cylinder High	-	-	-	-	-	-	-	-
Device/Head	1	-	1	D	-	-	-	-
Command	1	1	1	0	1	1	1	1

Command Block Command Input								
Register	7	6	5	4	3	2	1	0
Data	-	-	-	-	-	-	-	-
Error	…See Below…							
Sector Count	-	-	-	-	-	-	-	-
Sector Number	-	-	-	-	-	-	-	-
Cylinder Low	-	-	-	-	-	-	-	-
Cylinder High	-	-	-	-	-	-	-	-
Device/Head	-	-	-	-	-	-	-	-
Status	…See Below…							

Error Register							
7	6	5	4	3	2	1	0
CRC	UNC	0	IDN	0	ABT	T0N	AMN
0	0	0	0	0	V	0	0

Status Register							
7	6	5	4	3	2	1	0
BSY	RDY	DF	DSC	DRQ	COR	IDX	ERR
0	V	0	-	-	0	-	V

On successful completion of this EPC subcommand, the device updates the Power Conditions log for the selected Power Condition ID as follows:

1) if Default is set to one, then:
   A) copy the Default Timer Settings field to the Current Timer Settings field; and
   B) copy the Default Timer Enabled field to the Current Timer Enabled field;
2) if Default is cleared to zero, then:
   A) copy the Saved Timer Settings field to the Current Timer Settings field; and
   B) copy the Saved Timer Enabled field to the Current Timer Enabled field;
   and
3) if Save is set to one and the power condition is savable, then:
   A) copy the Current Timer Settings field to the Saved Timer Settings field;

Output Parameters To The Device

Sector Count	Power Condition ID (See Table 66)	
Sector Number	**bit**	**Description**
	7	Reserved
	6	Default
		1 Restore from Default settings
		0 Restore from Saved settings
	5	Reserved
	4	Save
		1 Save settings on completion
		0 Do not save settings on completion
	3-0	0h Restore Power Condition subcommand (See Table 65)

Error Output

If any selected Power Condition is not supported, or is not changeable, or if Extended Power Condition feature set is disable, or if Save is set to one and any selected power condition is not savable, then the device returns command aborted.

12.55.8.2 Go To Power Condition subcommand (1h)

Table 238 Go To Power Condition subcommand

Command Block Normal Outputs								
Register	7	6	5	4	3	2	1	0
Data	-	-	-	-	-	-	-	-
Feature	0	1	0	0	1	0	1	0
Sector Count	V	V	V	V	V	V	V	V
Sector Number	-	-	-	-	0	0	0	1
Cylinder Low	-	-	-	-	-	-	-	-
Cylinder High	-	-	-	-	-	-	-	-
Device/Head	1	-	1	D	-	-	V	V
Command	1	1	1	0	1	1	1	1

Command Block Command Input								
Register	7	6	5	4	3	2	1	0
Data	-	-	-	-	-	-	-	-
Error	…See Below…							
Sector Count	-	-	-	-	-	-	-	-
Sector Number	-	-	-	-	-	-	-	-
Cylinder Low	-	-	-	-	-	-	-	-
Cylinder High	-	-	-	-	-	-	-	-
Device/Head	-	-	-	-	-	-	-	-
Status	…See Below…							

Error Register							
7	6	5	4	3	2	1	0
CRC	UNC	0	IDN	0	ABT	T0N	AMN
0	0	0	0	0	V	0	0

Status Register							
7	6	5	4	3	2	1	0
BSY	RDY	DF	DSC	DRQ	COR	IDX	ERR
0	V	0	-	-	0	-	V

On successful completion of this EPC subcommand, the device:

1) stops all enabled EPC timers;
2) enters the selected EPC power condition after command completion of the SET FEATURES command without having to wait for any timers to expire; and
3) the device remains in the selected power condition until the device processes the next command or reset.

Output Parameters To The Device

Sector Count Power Condition ID (See Table 66)

Sector Number	**bit**	**Description**
	7-4	Reserved
	3-0	1h Go To Power Condition subcommand (See Table 65)
Device/Head	**1**	DELAYED ENTRY bit
	0	HOLD POWER CONDITION bit

Error Output

If the Power condition ID is FFh, a reserved value, or is not supported, or if Extended Power Condition feature set is disable, then the device returns command aborted .

12.55.8.3 Set Power Condition Timer subcommand (2h)

Table 239 Set Power Condition Timer subcommand

Command Block Normal Outputs								
Register	7	6	5	4	3	2	1	0
Data	-	-	-	-	-	-	-	-
Feature	0	1	0	0	1	0	1	0
Sector Count	V	V	V	V	V	V	V	V
Sector Number	V	-	V	V	0	0	1	0
Cylinder Low	V	V	V	V	V	V	V	V
Cylinder High	V	V	V	V	V	V	V	V
Device/Head	1	-	1	D	-	-	-	-
Command	1	1	1	0	1	1	1	1

Command Block Command Input								
Register	7	6	5	4	3	2	1	0
Data	-	-	-	-	-	-	-	-
Error	…See Below…							
Sector Count	-	-	-	-	-	-	-	-
Sector Number	-	-	-	-	-	-	-	-
Cylinder Low	-	-	-	-	-	-	-	-
Cylinder High	-	-	-	-	-	-	-	-
Device/Head	-	-	-	-	-	-	-	-
Status	…See Below…							

Error Register							
7 CRC	6 UNC	5 0	4 IDN	3 0	2 ABT	1 T0N	0 AMN
0	0	0	0	0	V	0	0

Status Register							
7 BSY	6 RDY	5 DF	4 DSC	3 DRQ	2 COR	1 IDX	0 ERR
0	V	0	-	-	0	-	V

On successful completion of this EPC subcommand, the device updates the Power Conditions log for the selected and supported Power Condition as follows:

1) copy the Timer field to the Current Timer Settings field;
2) if Enable is set to one and the Timer field is non-zero, then enable the Current Timer;
3) if Enable is set to one and the Timer field is zero, then disable the Current Timer;
4) if Enable is cleared to zero, then disable the Current Timer; and
5) if Save is set to one and the Power Condition settings are savable, then:
   A) copy the Current Timer Settings field to the Saved Timer Settings field; and
   B) copy the Current Timer Enabled field to the Saved Timer Enabled field.

Output Parameters To The Device

Sector Count	Power Condition ID (See Table 65)	
Sector Number	**bit**	**Description**
	7	Timer Units If the Timer Units bit is cleared to zero, then the Timer (Cylinder High and Cylinder Low bit 15-0) are specified in units of 100 milliseconds. If the Timer Units bit is set to one, then the Timer (Cylinder High and Cylinder Low bit 15-0) are specified in units of 1 minute.
	6	Reserved
	5	Enable **1** Enable the selected power condition **0** Disable the selected power condition
	4	Save **1** Save settings on completion **0** Do not save settings on completion
	3-0	2h Set Power Condition Timer subcommand (See Table 65)
Cylinder Low **Cylinder High**	**15-0**	If the new timer value is greater than the maximum value setting, then the device set the value to the maximum setting. If the new timer value is less than the minimum setting, then the device set the value to the minimum setting. (Cylinder High and Cylinder Low bit 15-0)

Error Output
The device returns command aborted if:

a) the new timer value is:
   A) less than the maximum setting.
   B) greater than the minimum setting.
   C) not supported by the device.
b) the Extended Power Condition feature set is disabling.
c) the power condition is not changeable or not supported.
d) the Save bit is set to one and the selected power condition is not savable.
e) the new time value is greater than the maximum setting and the device did not set the timer to the maximum setting.
f) the new time value is less than the minimum setting and the device did not set the timer to the minimum setting.

If command aborted is returned, then the device makes no modifications to the power condition settings.
Maximum Setting is 3BFFC4h (100ms unit). Minimum Setting is zero.

12.55.8.4 Set Power Condition State subcommand (3h)

Table 240 Set Power Condition State subcommand

Command Block Normal Outputs								
Register	7	6	5	4	3	2	1	0
Data	-	-	-	-	-	-	-	-
Feature	0	1	0	0	1	0	1	0
Sector Count	V	V	V	V	V	V	V	V
Sector Number	-	-	V	V	0	0	1	1
Cylinder Low	-	-	-	-	-	-	-	-
Cylinder High	-	-	-	-	-	-	-	-
Device/Head	1	-	1	D	-	-	-	-
Command	1	1	1	0	1	1	1	1

Command Block Command Input								
Register	7	6	5	4	3	2	1	0
Data	-	-	-	-	-	-	-	-
Error	…See Below…							
Sector Count	-	-	-	-	-	-	-	-
Sector Number	-	-	-	-	-	-	-	-
Cylinder Low	-	-	-	-	-	-	-	-
Cylinder High	-	-	-	-	-	-	-	-
Device/Head	-	-	-	-	-	-	-	-
Status	…See Below…							

Error Register							
7	6	5	4	3	2	1	0
CRC	UNC	0	IDN	0	ABT	T0N	AMN
0	0	0	0	0	V	0	0

Status Register							
7	6	5	4	3	2	1	0
BSY	RDY	DF	DSC	DRQ	COR	IDX	ERR
0	V	0	-	-	0	-	V

On successful completion of this EPC subcommand, the device updates the Power Conditions log for the Power Condition as follows:

1) If the Enable bit is set to one, then enable the Current Timer; otherwise disable the Current Timer; and
2) If the Save bit is set to one, then copy the Current Timer Enabled field to the Saved Timer Enabled field.

Output Parameters To The Device

Sector Count Power Condition ID (See Table 66)

Sector Number

bit	Description
7-6	Reserved
5	Enable
1	Enable the selected power condition
0	Disable the selected power condition
4	Save
1	Save settings on completion
0	Do not save settings on completion
3-0	3h Set Power Condition State subcommand (See Table 65)

Error Output

If the Power Condition is not changeable, or not supported, or if Extended Power Conditions feature set is disabling, then the device returns command aborted. If the Save bit is set to one and the selected power condition is not savable, then the device returns command aborted. If command aborted is returned, then the device makes no modifications to the power condition settings.

12.55.8.5 Enable the EPC feature subcommand (4h)

Table 241 Enable the EPC feature subcommand

Command Block Normal Outputs								
Register	7	6	5	4	3	2	1	0
Data	-	-	-	-	-	-	-	-
Feature	0	1	0	0	1	0	1	0
Sector Count	-	-	-	-	-	-	-	-
Sector Number	-	-	-	-	0	1	0	0
Cylinder Low	-	-	-	-	-	-	-	-
Cylinder High	-	-	-	-	-	-	-	-
Device/Head	1	-	1	D	-	-	-	-
Command	1	1	1	0	1	1	1	1

Command Block Command Input								
Register	7	6	5	4	3	2	1	0
Data	-	-	-	-	-	-	-	-
Error	…See Below…							
Sector Count	-	-	-	-	-	-	-	-
Sector Number	-	-	-	-	-	-	-	-
Cylinder Low	-	-	-	-	-	-	-	-
Cylinder High	-	-	-	-	-	-	-	-
Device/Head	-	-	-	-	-	-	-	-
Status	…See Below…							

Error Register							
7 CRC	6 UNC	5 0	4 IDN	3 0	2 ABT	1 T0N	0 AMN
0	0	0	0	0	V	0	0

Status Register							
7 BSY	6 RDY	5 DF	4 DSC	3 DRQ	2 COR	1 IDX	0 ERR
0	V	0	-	-	0	-	V

On successful completion of this EPC subcommand, the device:

a) enables the EPC feature set;
b) sets IDENITFY DEVICE data Word 120 bit 7 to one; and
c) disables the APM feature set.
d) if the Saved Timer Setting field is cleared to zero, then:
   copy the value of the Default Timer Setting to the Current Timer Setting; and
e) if the Saved Timer Setting field is non-zero, then:
   copy the value of the Saved Timer Setting to the Current Timer Setting; and
f) if the Current Timer Setting field is non-zero and the Current Timer Enabled is set to one, then initialize and start the timer.

If the EPC feature set is enabled, then the EPC feature set remains enabled across all resets (i.e., power-on reset, hardware reset, and software reset).

Output Parameters To The Device

Sector Number	**bit**	**Description**
	7-4	Reserved
	3-0	4h Enable the EPC feature subcommand (See Table 65)

Error Output

If the Extended Power Condition feature set is not supported then the device returns command aborted.

12.55.8.6 Disable the EPC feature subcommand (5h)

Table 242 Disable the EPC feature subcommand

Command Block Normal Outputs								
Register	7	6	5	4	3	2	1	0
Data	-	-	-	-	-	-	-	-
Feature	0	1	0	0	1	0	1	0
Sector Count	-	-	-	-	-	-	-	-
Sector Number	-	-	-	-	0	1	0	1
Cylinder Low	-	-	-	-	-	-	-	-
Cylinder High	-	-	-	-	-	-	-	-
Device/Head	1	-	1	D	-	-	-	-
Command	1	1	1	0	1	1	1	1

Command Block Command Input								
Register	7	6	5	4	3	2	1	0
Data	-	-	-	-	-	-	-	-
Error	…See Below…							
Sector Count	-	-	-	-	-	-	-	-
Sector Number	-	-	-	-	-	-	-	-
Cylinder Low	-	-	-	-	-	-	-	-
Cylinder High	-	-	-	-	-	-	-	-
Device/Head	-	-	-	-	-	-	-	-
Status	…See Below…							

Error Register							
7 CRC	6 UNC	5 0	4 IDN	3 0	2 ABT	1 T0N	0 AMN
0	0	0	0	0	V	0	0

Status Register							
7 BSY	6 RDY	5 DF	4 DSC	3 DRQ	2 COR	1 IDX	0 ERR
0	V	0	-	-	0	-	V

On successful completion of this EPC subcommand, the device:

a) stop all EPC timers
b) disables the EPC feature set; and
c) clears IDENITFY DEVICE data Word 120 bit 7 to zero.

If the EPC feature set is disabled, then the EPC feature set remains disabled across all resets (i.e., power-on reset, hardware reset, and software reset).

Output Parameters To The Device

Sector Number bit Description

7-4 Reserved

3-0 5h Disable the EPC feature subcommand (See Table 65)

Error Output

If the Extended Power Condition feature set is disabling, not supported then the device returns command aborted.

12.55.9 Repurposing Depopulation Feature (5Bh : Vendor Specific)

When the Feature register is 5Bh (Repurposing Depopulation Feature, also known as RDP), the Sector Count Register specifies whether the Repurposing Depopulation feature will be enabled. When the value is set to 01h, RDP commands are enabled. When the value is set to 00h, RDP commands are disabled. This setting is persistent over a power cycle.

12.55.10 Write Cache Enabled Data Safety (5Ch : Vendor Specific)

When the Feature register is 5Ch (Write Cache Enabled Data Safety), the Sector Count Register specifies whether the Write Cache Enabled Data Safety feature will be enabled. When the value is set to 01h, Write Cache Enabled Data Safety is enabled. When the value is set to 00h, Write Cache Enabled Data Safety is disabled. If Write Cache is enabled and Write Cache Enabled Data Safety is enabled, the device will preserve data in write cache if a power loss occurs.

12.55.11 Enable/Disable the Sense Data Reporting (C3h)

Sense Data Reporting feature set is always enabled for the device. If this subcommand (code C3h) has the count field bit 0 cleared to zero, then the device returns command completion with error.

12.55.12 Execute RDP Certification for SATA (E0h : Vendor Specific)

When the Feature register is E0h (RDP Certification), the Sector Count Register specifies if RDP Certification will be performed after execution of the RDP command. When the value is set to 01h, RDP certification is executed. When the value is set to 00h, RDP certification is not executed.

12.56 Set Max Address (F9h)

The device regards as Set Max Address command, if this command is immediately preceded by a Read Native Max Address command. The device receives this command without a prior Read Native Max Address command, the device regards as Set Max security extensions command according to feature register value. Valid features values are as follows:

1. 01h indicates Set Max Set Password command
2. 02h indicates Set Max Lock command
3. 03h indicates Set Max Unlock command
4. 04h indicates Set Max Freeze LOCK command

This command overwrites the maximum number of Address of HDD in a range of actual device capacity. Once device receives this command, all accesses beyond that Address are rejected with setting ABORT bit in status register. Identify device command returns the Address which is set via this command as a default value.
Device returns command aborted for a second non-volatile Set Max Address command until next power on or hardware reset.
Device returns command aborted during Set Max Locked mode or Set Max Frozen mode.
After a successful command completion, Identify Device response words (61:60) shall reflect the maximum address set with this command.
If the 48-bit Address feature set is supported, the value placed in Identify Device response words (103:100) shall be the same as the value placed in words (61:60). However, if the device contains greater than 268,435,455 sectors, the capacity addressable with 28-bit commands, and the address requested is 268,435,455, the max address shall be changed to the native maximum address, the value placed in words (61:60) shall be 268,435,455 and the value placed in words (103:100) shall be the native maximum address.
If a host protected area has been established by a Set Max Address Ext command, the device shall return command aborted.

Table 243 Set Max ADDRESS (F9h)

Command Block Normal Outputs								
Register	7	6	5	4	3	2	1	0
Data	-	-	-	-	-	-	-	-
Feature	V	V	V	V	V	V	V	V
Sector Count	-	-	-	-	-	-	-	B
Sector Number	V	V	V	V	V	V	V	V
Cylinder Low	V	V	V	V	V	V	V	V
Cylinder High	V	V	V	V	V	V	V	V
Device/Head	1	1	1	D	H	H	H	H
Command	1	1	1	1	1	0	0	1

Command Block Command Input								
Register	7	6	5	4	3	2	1	0
Data	-	-	-	-	-	-	-	-
Error	…See Below…							
Sector Count	-	-	-	-	-	-	-	-
Sector Number	V	V	V	V	V	V	V	V
Cylinder Low	V	V	V	V	V	V	V	V
Cylinder High	V	V	V	V	V	V	V	V
Device/Head	-	-	-	-	H	H	H	H
Status	…See Below…							

Error Register							
7	6	5	4	3	2	1	0
CRC	UNC	0	IDN	0	ABT	T0N	AMN
0	0	0	0	0	V	0	0

Status Register							
7	6	5	4	3	2	1	0
BSY	RDY	DF	DSC	DRQ	COR	IDX	ERR
0	V	0	-	-	0	-	V

Output Parameters To The Device

B	Option bit for selection whether nonvolatile or volatile. B=0 is volatile condition. When B=1, MAX Address which is set by Set Max Address command is preserved by POR. When B=0, MAX Address which is set by Set Max Address command will be lost by POR. B=1 is not valid when the device is in Address Offset mode.
Sector Number	This register contains LBA bits 0 – 7 which is to be input.
Cylinder High/Low	This register contains LBA bits 8 – 15 (Low), 16 – 23 (High) which is to be set.
H	This register contains LBA bits 24 – 27 which is to be set.

Input Parameters From The Device

Sector Number	This register contains max LBA bits 0 – 7 which is set.
Cylinder High/Low	This register contains max LBA bits 8 – 15 (Low), 16 – 23 (High) which is set.
H	This register contains max LBA bits 24 – 27 which is set.

12.56.1 Set Max Set Password (Feature = 01h)

The device regards as Set Max Address command, if this command is immediately preceded by a Read Native Max Address command.
This command requests a transfer of a single sector of data from the host including the information specified in .
The password is retained by the device until the next power cycle. When the device accepts this command the device is in Set_Max_Unlocked state.

Table 244 Set Max Set Password

Command Block Normal Outputs								
Register	7	6	5	4	3	2	1	0
Data	-	-	-	-	-	-	-	-
Feature	0	0	0	0	0	0	0	1
Sector Count	-	-	-	-	-	-	-	-
Sector Number	-	-	-	-	-	-	-	-
Cylinder Low	-	-	-	-	-	-	-	-
Cylinder High	-	-	-	-	-	-	-	-
Device/Head	1	-	1	D	-	-	-	-
Command	1	1	1	1	1	0	0	1

Command Block Command Input								
Register	7	6	5	4	3	2	1	0
Data	-	-	-	-	-	-	-	-
Error	…See Below…							
Sector Count	-	-	-	-	-	-	-	-
Sector Number	-	-	-	-	-	-	-	-
Cylinder Low	-	-	-	-	-	-	-	-
Cylinder High	-	-	-	-	-	-	-	-
Device/Head	1	-	1	D	-	-	-	-
Status	…See Below…							

Error Register							
7	6	5	4	3	2	1	0
CRC	UNC	0	IDN	0	ABT	T0N	AMN
0	0	0	0	0	V	0	0

Status Register							
7	6	5	4	3	2	1	0
BSY	RDY	DF	DSC	DRQ	COR	IDX	ERR
0	V	0	-	-	0	-	V

Table 245 Set Max Set Password data contents

Word	**Description**
0	Reserved
01-16	Password (32 byte)
17-255	Reserved

12.56.2 Set Max Lock (Feature = 02h)

This command sets the device into Set_Max_Locked state. After this command is completed any other Set Max commands except Set Max Unlock and Set Max Freeze Lock are rejected. The device remains in this state until a power cycle or the acceptance of a Set Max Unlock or Set Max Freeze Lock command.

Table 246 Set Max Lock.

Command Block Normal Outputs								
Register	7	6	5	4	3	2	1	0
Data	-	-	-	-	-	-	-	-
Feature	0	0	0	0	0	0	1	0
Sector Count	-	-	-	-	-	-	-	-
Sector Number	-	-	-	-	-	-	-	-
Cylinder Low	-	-	-	-	-	-	-	-
Cylinder High	-	-	-	-	-	-	-	-
Device/Head	1	-	1	D	-	-	-	-
Command	1	1	1	1	1	0	0	1

Command Block Command Input								
Register	7	6	5	4	3	2	1	0
Data	-	-	-	-	-	-	-	-
Error	…See Below…							
Sector Count	-	-	-	-	-	-	-	-
Sector Number	-	-	-	-	-	-	-	-
Cylinder Low	-	-	-	-	-	-	-	-
Cylinder High	-	-	-	-	-	-	-	-
Device/Head	1	-	1	D	-	-	-	-
Status	…See Below…							

Error Register							
7	6	5	4	3	2	1	0
CRC	UNC	0	IDN	0	ABT	T0N	AMN
0	0	0	0	0	V	0	0

Status Register							
7	6	5	4	3	2	1	0
BSY	RDY	DF	DSC	DRQ	COR	IDX	ERR
0	V	0	-	-	0	-	V

12.56.3 Set Max Unlock (Feature = 03h)

The device regards as Set Max Address command, if this command is immediately preceded by a Read Native Max Address command.

This command requests a transfer of a single sector of data from the host including the information specified in Table 244 with the stored SET MAX password.

If the password compare fails then the device returns an abort error to the host and decrements the unlock attempt counter. This counter is initially set to 5 and is decremented for each password mismatch. When this counter reaches zero then all Set Max Unlock commands are rejected until a hard reset or a power off. If the password compares matches, then the device set the Set_Max_Unlocked state and all Set Max commands shall be accepted

Table 247 Set Max Unlock (F9h)

Command Block Normal Outputs								
Register	7	6	5	4	3	2	1	0
Data	-	-	-	-	-	-	-	-
Feature	0	0	0	0	0	0	1	1
Sector Count	-	-	-	-	-	-	-	-
Sector Number	-	-	-	-	-	-	-	-
Cylinder Low	-	-	-	-	-	-	-	-
Cylinder High	-	-	-	-	-	-	-	-
Device/Head	1	-	1	D	-	-	-	-
Command	1	1	1	1	1	0	0	1

Command Block Command Input								
Register	7	6	5	4	3	2	1	0
Data	-	-	-	-	-	-	-	-
Error	…See Below…							
Sector Count	-	-	-	-	-	-	-	-
Sector Number	-	-	-	-	-	-	-	-
Cylinder Low	-	-	-	-	-	-	-	-
Cylinder High	-	-	-	-	-	-	-	-
Device/Head	1	-	1	D	-	-	-	-
Status	…See Below…							

Error Register							
7	6	5	4	3	2	1	0
CRC	UNC	0	IDN	0	ABT	T0N	AMN
0	0	0	0	0	V	0	0

Status Register							
7	6	5	4	3	2	1	0
BSY	RDY	DF	DSC	DRQ	COR	IDX	ERR
0	V	0	-	-	0	-	V

.

12.56.4 Set Max Freeze Lock (Feature = 04h)

The device regards as Set Max Address command, if this command is immediately preceded by a Read Native Max Address command.

The Set Max Freeze Lock command sets the device to Set_Max_Frozen state. After command completion any subsequent Set Max commands are rejected. Commands disabled by Set Max Freeze Lock are:

1. Set Max Address
2. Set Max Set PASSWORD
3. Set Max Lock
4. Set Max Unlock

Table 248 Set Max Freeze Lock (F9h)

Command Block Normal Outputs								
Register	7	6	5	4	3	2	1	0
Data	-	-	-	-	-	-	-	-
Feature	0	0	0	0	0	1	0	0
Sector Count	-	-	-	-	-	-	-	-
Sector Number	-	-	-	-	-	-	-	-
Cylinder Low	-	-	-	-	-	-	-	-
Cylinder High	-	-	-	-	-	-	-	-
Device/Head	1	-	1	D	-	-	-	-
Command	1	1	1	1	1	0	0	1

Command Block Command Input								
Register	7	6	5	4	3	2	1	0
Data	-	-	-	-	-	-	-	-
Error	…See Below…							
Sector Count	-	-	-	-	-	-	-	-
Sector Number	-	-	-	-	-	-	-	-
Cylinder Low	-	-	-	-	-	-	-	-
Cylinder High	-	-	-	-	-	-	-	-
Device/Head	1	-	1	D	-	-	-	-
Status	…See Below…							

Error Register							
7	6	5	4	3	2	1	0
CRC	UNC	0	IDN	0	ABT	T0N	AMN
0	0	0	0	0	V	0	0

Status Register							
7	6	5	4	3	2	1	0
BSY	RDY	DF	DSC	DRQ	COR	IDX	ERR
0	V	0	-	-	0	-	V

12.57 Set Max Address Ext (37h)

This command is immediately preceded by a Read Native Max Address Ext command.
This command overwrites the maximum number of Address of HDD in a range of actual device capacity. Once device receives this command, all accesses beyond that Address are rejected with setting ABORT bit in status register.
When the address requested is greater than 268,435,455, words (103:100) shall be modified to reflect the requested value, but words (61:60) shall not be modified. When the address requested is equal to or less than 268,435,455, words (103:100) shall be modified to reflect the requested value, and words (61:60) shall also be modified.
If this command is not supported, the maximum value to be set exceeds the capacity of the device, a host protected area has been established by a Set Max Address command, the command is not immediately preceded by a Read Native Max Address Ext command, or the device is in the Set Max Locked or Set Max Frozen state, the device shall return command aborted.
The device returns the command aborted for a second non-volatile Set Max Address Ext command until next power on or hardware reset.

Table 249 Set Max Address Ext Command (37h)

Command Block Normal Outputs									
Register		7	6	5	4	3	2	1	0
Data Low		-	-	-	-	-	-	-	-
Data High		-	-	-	-	-	-	-	-
Feature	Current	-	-	-	-	-	-	-	-
	Previous	-	-	-	-	-	-	-	-
Sector Count	Current	-	-	-	-	-	-	-	B
	Previous	-	-	-	-	-	-	-	-
Sector Number	Current	V	V	V	V	V	V	V	V
	Previous	V	V	V	V	V	V	V	V
Cylinder Low	Current	V	V	V	V	V	V	V	V
	Previous	V	V	V	V	V	V	V	V
Cylinder High	Current	V	V	V	V	V	V	V	V
	Previous	V	V	V	V	V	V	V	V
Device/Head		-	1	-	D	-	-	-	-
Command		0	0	1	1	0	1	1	1

Command Block Command Input									
Register		7	6	5	4	3	2	1	0
Data Low		-	-	-	-	-	-	-	-
Data High		-	-	-	-	-	-	-	-
Error		…See Below…							
Sector Count	HOB=0	-	-	-	-	-	-	-	-
	HOB=1	-	-	-	-	-	-	-	-
Sector Number	HOB=0	V	V	V	V	V	V	V	V
	HOB=1	V	V	V	V	V	V	V	V
Cylinder Low	HOB=0	V	V	V	V	V	V	V	V
	HOB=1	V	V	V	V	V	V	V	V
Cylinder High	HOB=0	V	V	V	V	V	V	V	V
	HOB=1	V	V	V	V	V	V	V	V
Device/Head		-	-	-	-	-	-	-	-
Status		…See Below…							

Error Register							
7	6	5	4	3	2	1	0
CRC	UNC	0	IDN	0	ABT	T0N	AMN
0	0	0	0	0	V	0	0

Status Register							
7	6	5	4	3	2	1	0
BSY	RDY	DF	DSC	DRQ	COR	IDX	ERR
0	V	0	-	-	0	-	V

Output Parameters To The Device

B	Option bit for selection whether nonvolatile or volatile. B=0 is volatile condition. When B=1, MAX Address which is set by Set Max Address Ext command is preserved by POR. When B=0, MAX Address which is set by Set Max Address Ext command will be lost by POR. B=1 is not valid when the device is in Address Offset mode.
Sector Number Current	Set Max LBA (7:0).
Sector Number Previous	Set Max LBA (31:24).
Cylinder Low Current	Set Max LBA (15:8).
Cylinder Low Previous	Set Max LBA (39:32).
Cylinder High Current	Set Max LBA (23:16).
Cylinder High Previous	Set Max LBA (47:40).

Input Parameters From The Device

Sector Number (HOB=0)	Set Max LBA (7:0).
Sector Number (HOB=1)	Set Max LBA (31:24).
Cylinder Low (HOB=0)	Set Max LBA (15:8).
Cylinder Low (HOB=1)	Set Max LBA (39:32).
Cylinder High (HOB=0)	Set Max LBA (23:16).
Cylinder High (HOB=1)	Set Max LBA (47:40).

12.58 Set Multiple Mode (C6h)

The Set Multiple command enables the device to perform Read and Write Multiple commands and establishes the block size for these commands. The block size is the number of sectors to be transferred for each interrupt.
If an invalid block size is specified, an Abort error will be returned to the host, and Read Multiple and Write Multiple commands will be disabled.

Count indicates the block size to be used for Read Multiple and Write Multiple commands. Valid block sizes can be selected from 0, 1, 2, 4, 8 or 16. If 0 is specified, then Read Multiple and Write Multiple commands are disabled.

Table 250 Set Multiple Mode Commands (C6h)

Command Input

Field	Description
FEATURE	N/A
COUNT	DRQ data block count
LBA	N/A
DEVICE	**Bit** **Description** 7 Obsolete 6 N/A 5 Obsolete 4 Transport Dependent 3:0 Reserved
Command	7:0 C6h

Normal Outputs

See Normal Outputs in Section 12.9 Flush Cache (E7h)

Error Outputs

See Error Outputs in Section 12.14 Idle (E3h / 97h)

12.59 Set Sector Configuration Ext (B2h)

The Set Sector Configuration Ext command sets the device logical block length and number of logical sectors per physical sector.
The successful processing of a SET SECTOR CONFIGURATION command results in the device setting the ACCESSIBLE CAPACITY field (see Table 178) to the new native max address.

NOTE: No block sizes should be supported other than 512 bytes and 4096 bytes.
NOTE: Invalid customer formats are not supported, the command is aborted in this case.

Table 251 Set Sector Configuration Ext Commands (B2h)

Command Block Output Registers									
Register		7	6	5	4	3	2	1	0
Data Low		-	-	-	-	-	-	-	-
Data High		-	-	-	-	-	-	-	-
Feature	Current	V	V	V	V	V	V	V	V
	Previous	V	V	V	V	V	V	V	V
Sector Count	Current	-	-	-	-	V	V	V	V
	Previous	-	-	-	-	-	-	-	V
Sector Number	Current	-	-	-	-	-	-	-	V
	Previous	-	-	-	-	-	-	-	-
Cylinder Low	Current	-	-	-	-	-	-	-	V
	Previous	-	-	-	-	-	-	-	V
Cylinder High	Current	-	-	-	-	-	-	-	-
	Previous	-	-	-	-	-	-	-	-
Device/Head		-	1	-	D	-	-	-	-
Command		1	0	1	1	0	0	1	0

Command Block Input Registers									
Register		7	6	5	4	3	2	1	0
Data Low		-	-	-	-	-	-	-	-
Data High		-	-	-	-	-	-	-	-
Error		…See Below…							
Sector Count	HOB=0	-	-	-	-	-	-	-	-
	HOB=1	-	-	-	-	-	-	-	-
Sector Number	HOB=0	-	-	-	-	-	-	-	-
	HOB=1	-	-	-	-	-	-	-	-
Cylinder Low	HOB=0	-	-	-	-	-	-	-	-
	HOB=1	-	-	-	-	-	-	-	-
Cylinder High	HOB=0	-	-	-	-	-	-	-	-
	HOB=1	-	-	-	-	-	-	-	-
Device/Head		-	-	-	-	-	-	-	-
Status		…See Below…							

Error Register							
7	6	5	4	3	2	1	0
CRC	UNC	0	IDN	0	ABT	T0N	AMN
0	0	0	0	0	V	0	0

Status Register							
7	6	5	4	3	2	1	0
BSY	RDY	DF	DSC	DRQ	COR	IDX	ERR
0	V	0	-	-	0	-	V

Output Parameters To The Device

Feature The value in the Command Check field is taken from the Descriptor Check field (see Section 12.25.16.4) in the descriptor specified by the Sector Configuration Descriptor Index field.
The value in the Descriptor Check field shall not be equal to the value in the Descriptor Check field in any other valid Sector Configuration Descriptor in this device.

Sector Count

bit	**Description**
15-3	Reserved
2-0	Sector Configuration Descriptor Index field

12.60 Sleep (E6h/99h)

This command causes the device to enter Sleep Mode.
The device is spun down and the interface becomes inactive. If the device is already spun down, the spin down sequence is not executed.

The only way to recover from Sleep Mode is with software reset or hardware reset.

Table 252 Sleep Command (E6h/99h)

Command Input

Field	Description
FEATURE	N/A
COUNT	N/A
LBA	N/A
DEVICE	**Bit** **Description** 7 Obsolete 6 N/A 5 Obsolete 4 Transport Dependent 3:0 Reserved
Command	7:0 E6h or 99h

Normal Outputs

See Normal Outputs in Section 12.9 Flush Cache (E7h)

Error Outputs

See Error Outputs in Section 12.14 Idle (E3h / 97h)

12.61 SMART Function Set (B0h)

The SMART Function Set command provides access to Attribute Values, Attribute Thresholds and other low level subcommands that can be used for logging and reporting purposes and to accommodate special user needs. The SMART Function Set command has several separate subcommands which are selectable via the device's Features Register when the SMART Function Set command is issued by the host.

12.61.1 SMART Subcommand

In order to select a subcommand, the host must write the subcommand code to the device's Features Register before issuing the SMART Function Set command. The subcommands and their respective codes are listed below.

Code	Subcommand
D0h	SMART Read Attribute Values
D1h	SMART Read Attribute Thresholds
D2h	SMART Enable/Disable Attribute Autosave
D3h	SMART Save Attribute Values
D4h	SMART Execute Off-line Immediate
D5h	SMART Read Log
D6h	SMART Write Log
D8h	SMART Enable Operations
D9h	SMART Disable Operations
DAh	SMART Return Status
DBh	SMART Enable/Disable Automatic Off-Line

12.61.1.1 SMART Read Attribute Values (Subcommand D0h)

This subcommand returns the device's Attribute Values to the host. Upon receipt of the SMART Read Attribute Values subcommand from the host, the device transfers 512 bytes of Attribute Value information to the host.

12.61.1.2 SMART Read Attribute Thresholds (Subcommand D1h)

This subcommand returns the device's Attribute Thresholds to the host. Upon receipt of the SMART Read Attribute Thresholds subcommand from the host, the transfers 512 bytes of Attribute Thresholds information to the host.

12.61.1.3 SMART Enable/Disable Attribute Autosave (Subcommand D2h)

This subcommand Enables and Disables the Attribute Autosave feature of the device. The SMART Enable/Disable Attribute Autosave subcommand either allows the device to automatically save its updated Attribute Values to the Attribute Data Sector periodically; or this subcommand causes the Autosave feature to be disabled. The state of the Attribute Autosave feature (either enabled or disabled) will be preserved by the device across power cycle.
A value of 00h written by the host into the device's Sector Count Register before issuing the SMART Enable/Disable Attribute Autosave subcommand will cause this feature to be disabled. Disabling this feature does not preclude the device from saving Attribute Values to the Attribute Data sectors during some other normal operation such as during a power-up or power-down.

A value of F1h written by the host into the device's Sector Count Register before issuing the SMART Enable/Disable Attribute Autosave subcommand will cause this feature to be enabled. Any other non-zero value written by the host into this register before issuing the SMART Enable/Disable Attribute Autosave subcommand will not change the current Autosave status but the device will respond with the SMART error code specified in .

The SMART Disable Operations subcommand disables the Autosave feature along with the device's SMART operations.

Upon the receipt of the subcommand from the host, the device asserts BSY, Enables or Disables the Autosave feature, clears BSY and asserts INTRQ.

Table 253 SMART Enable/Disable Attribute Autosave (B0h-D2h)

Command Input

Field	Description
FEATURE	D2h
COUNT	Value Description 00h Disable attribute autosave 01h-F0h N/A F1h Enable attribute autosave F2h-FFh N/A
LBA	**Bit Description** 27:24 N/A 23:8 C24Fh 7:0 N/A
DEVICE	**Bit Description** 7 Obsolete 6 N/A 5 Obsolete 4 Transport Dependent 3:0 Reserved
Command	7:0 B0h

Normal Outputs

See Normal Outputs in Section 12.9 Flush Cache (E7h)

Error Outputs

See Error Outputs in Section 12.14 Idle (E3h / 97h)

12.61.1.4 SMART Save Attribute Values (Subcommand D3h)

This subcommand causes the device to immediately save any updated Attribute Values to the device's Attribute Data sector regardless of the state of the Attribute Autosave feature. Upon receipt of the SMART Save Attribute Values subcommand from the host, the device writes any updated Attribute Values to the Attribute Data sector.

12.61.1.5 SMART Execute Off-line Immediate (Subcommand D4h)

This subcommand causes the device to immediately initiate the set of activities that collect Attribute data in an off-line mode (off-line routine) or execute a self-test routine in either captive or off-line mode.

Table 254 SMART Enable/Disable Attribute Autosave (B0h-D4h)

Command Input

Field	Description
FEATURE	D4h
COUNT	N/A
LBA	**Bit** **Description** 27:24 N/A 23:8 C24Fh 7:0 Defines the subcommand that shall be processed
DEVICE	**Bit** **Description** 7 Obsolete 6 N/A 5 Obsolete 4 Transport Dependent 3:0 Reserved
Command	7:0 B0h

Normal Outputs

Field	Description
ERROR	N/A
COUNT	N/A
LBA	**Bit** **Description** 27:24 N/A 23:8 Value Description : The subcommand specified a captive self-test that has completed without error. All Other Values: The subcommand specified an off-line routine including an off-line self-test routine. 7:0 N/A
DEVICE	**Bit** **Description** 7 Obsolete 6 N/A 5 Obsolete 4 Transport Dependent 3:0 Reserved
STATUS	**Bit** **Description** 7:6 Transport Dependent 5 DEVICE FAULT bit 4 N/A 3 Transport Dependent 2 N/A or ALIGNMENT ERROR bit 1 SENSE DATA AVAILABLE bit 0 ERROR bit

Error Outputs

Field	Description
ERROR	**Bit** **Description** 7:5 N/A 4 ID NOT FOUND bit 3 N/A 2 ABORT bit 1 N/A 0 Obsolete
COUNT	Reserved
LBA	**Bit** **Description** 27:24 N/A 23:8 Value Description C24Fh: Subcommand specified a captive self-test and some error other than a self-test routine failure occurred (i.e., if the sub-command is not supported or field values are invalid) 2CF4h: the subcommand specified a captive self-test routine that has failed during processing All Other Values: the subcommand specified an off-line routine including an off-line self-test routine. 7:0 N/A
DEVICE	**Bit** **Description** 7 Obsolete 6 N/A 5 Obsolete 4 Transport Dependent 3:0 Reserved
STATUS	**Bit** **Description** 7:6 Transport Dependent 5 DEVICE FAULT bit 4 N/A 3 Transport Dependent 2 N/A 1 SENSE DATA AVAILABLE bit 0 ERROR bit

The Sector Number register shall be set to specify the operation to be executed.

Subcommand	Operation to be executed
0	Execute SMART off-line data collection routine immediately
1	Execute SMART Short self-test routine immediately in off-line mode
2	Execute SMART Extended self-test routine immediately in off-line mode
4	Execute SMART Selective self-test routine immediately in off-line mode
127	Abort off-line mode self-test routine
129	Execute SMART Short self-test routine immediately in captive mode
130	Execute SMART Extended self-test routine immediately in captive mode
132	Execute SMART Selective self-test routine immediately in captive mode

Off-line mode: The device executes command completion before executing the specified routine. During execution of the routine the device will not set BSY nor clear DRDY. If the device is in the process of performing its routine and is interrupted by a new command from the host, the device will abort or suspend its routine and service the host within two seconds after receipt of the new command. After servicing the interrupting command, the device will resume its routine automatically or not start its routine depending on the interrupting command.

Captive mode: When executing self-test in captive mode, the device sets BSY to one and executes the specified self-test routine after receipt of the command. At the end of the routine, the device sets the execution result in the Self-test execution status byte (See Table 262) and ATA registers as below and executes command completion.

12.61.1.6 SMART Read Log (Subcommand D5h)

This command returns the specified log sector contents to the host.

Table 255 SMART Read Log Sector (B0h-D5h)

Command Input

Field	Description
FEATURE	D5h
COUNT	Specifies the number of log pages to be read from the specified log. The log transferred by the ATA device shall start at the first page in the specified log, regardless of the Count requested
LBA	**Bit** **Description** 27:24 N/A 23:8 C24Fh 7:0 LOG ADDRESS field – specifies the log to be read
DEVICE	**Bit** **Description** 7 Obsolete 6 N/A 5 Obsolete 4 Transport Dependent 3:0 Reserved
Command	7:0 B0h

Normal Outputs

See Normal Outputs in Section 12.9 Flush Cache (E7h)

Error Outputs

Field	Description
ERROR	**Bit** **Description** 7 INTERFACE CRC bit 6 UNCORRECTABLE ERROR bit 5 N/A 4 ID NOT FOUND bit 3 N/A 2 ABORT bit 1 N/A 0 Obsolete
COUNT	N/A
LBA	N/A
DEVICE	**Bit** **Description** 7 Obsolete 6 N/A 5 Obsolete 4 Transport Dependent 3:0 Reserved
STATUS	**Bit** **Description** 7:6 Transport Dependent 5 DEVICE FAULT bit 4 N/A 3 Transport Dependent 2 N/A 1 SENSE DATA AVAILABLE bit 0 ERROR bit

The 512 bytes data are returned at a command and the Sector Count value shall be set to one. Count field shall be set to specify the log sector address.

Table 256 Log sector addresses

Log sector address	Content	Type
00h	Log directory	Read Only
01h	Summary SMART Error Log	Read Only
03h	Extended Comprehensive SMART Error Log	See Note
06h	SMART Self-test Log	Read Only
07h	Extended Self-test Log	See Note
09h	Selective self-test Log	Read/Write
80h-9Fh	Host vendor specific	Read/Write

Note: Log addresses 03h and 07h are used by the Read Log Ext and Write Log Ext commands. If these log addresses are used with the SMART Read Log Sector command, the device shall return command aborted.

12.61.1.7 SMART Write Log (Subcommand D6h)

This command writes 512 bytes data to the specified log sector.

The 512 bytes data are transferred at a command and the Sector Count value shall be set to one. The Sector Number shall be set to specify the log sector address (See Table 256). If Read Only log sector is specified, the device returns ABRT error.

Table 257 SMART Write Log (B0h-D6h)

Command Input

Field	Description
FEATURE	D6h
COUNT	Specifies the number of log pages that shall be written. The data transferred to the device shall be stored starting at the first block in the specified log. If the device receives a value of zero in this field, then the device shall report command aborted
LBA	**Bit Description** 27:24 N/A 23:8 C24Fh 7:0 N/A
DEVICE	**Bit Description** 7 Obsolete 6 N/A 5 Obsolete 4 Transport Dependent 3:0 Reserved
Command	7:0 B0h

Normal Outputs

See Normal Outputs in Section 12.9 Flush Cache (E7h)

Error Outputs

Field	Description
ERROR	**Bit Description** 7 INTERFACE CRC bit 6:5 N/A 4 ID NOT FOUND bit 3 N/A 2 ABORT bit 1 N/A 0 Obsolete
COUNT	N/A
LBA	N/A
DEVICE	**Bit Description** 7 Obsolete 6 N/A 5 Obsolete 4 Transport Dependent 3:0 Reserved
STATUS	**Bit Description** 7:6 Transport Dependent 5 DEVICE FAULT bit 4 N/A 3 Transport Dependent 2 N/A 1 SENSE DATA AVAILABLE bit 0 ERROR bit

12.61.1.8 SMART Enable Operations (Subcommand D8h)

This subcommand enables access to all SMART capabilities within the device. Prior to receipt of a SMART Enable Operations subcommand, Attribute Values are neither monitored nor saved by the device. The state of SMART (either enabled or disabled) will be preserved by the device across power cycles. Once enabled, the receipt of subsequent SMART Enable Operations subcommands will not affect any of the Attribute Values.

Upon receipt of the SMART Enable Operations subcommand from the host, the device enables SMART capabilities and functions, and then saves any updated Attribute Values to the Attribute Data sector.

Table 258 SMART Enable Operations (B0h-D8h)

Command Input

Field	Description
FEATURE	D8h
COUNT	N/A
LBA	**Bit** **Description** 27:24 N/A 23:8 C24Fh 7:0 N/A
DEVICE	**Bit** **Description** 7 Obsolete 6 N/A 5 Obsolete 4 Transport Dependent 3:0 Reserved
Command	7:0 B0h

Normal Outputs

See Normal Outputs in Section 12.9 Flush Cache (E7h)

Error Outputs

See Error Outputs in Section 12.14 Idle (E3h / 97h)

.

12.61.1.9 SMART Disable Operations (Subcommand D9h)

This subcommand disables all SMART capabilities within the device including the device's attribute autosave feature. After receipt of this subcommand the device disables all SMART operations. Non self-preserved Attribute Values will no longer be monitored. The state of SMART (either enabled or disabled) is preserved by the device across power cycles.

Upon receipt of the SMART Disable Operations subcommand from the host, the device disables SMART capabilities and functions, and then saves any updated Attribute Values to the Attribute Data sector.

After receipt of the device of the SMART Disable Operations subcommand from the host, all other SMART subcommands – with the exception of SMART Enable Operations – are disabled, and invalid and will be aborted by the device (including the SMART Disable Operations subcommand), returning the error code as specified in .

Any Attribute Values accumulated and saved to volatile memory prior to receipt of the SMART Disable Operations command will be preserved in the device's Attribute Data Sectors. If the device is re-enabled, these Attribute Values will be updated, as needed, upon receipt of a SMART Read Attribute Values or SMART Save Attribute Values command.

12.61.1.10 SMART Return Status (Subcommand DAh)

This command is used to communicate the reliability status of the device to the host's request. Upon receipt of the SMART Return Status subcommand the device saves any updated Pre-failure type Attribute Values to the reserved sector and compares the updated Attribute Values to the Attribute Thresholds.
If the device does not detect a Threshold Exceeded Condition, the device loads 4Fh into the Cylinder Low register, C2h into the Cylinder High register.

If the device detects a Threshold Exceeded Condition, the device loads F4h into the Cylinder Low register, 2Ch into the Cylinder High register**.**

Table 259 SMART RETURN STATUS command (B0h-DAh)

Command Input

Field	**Description**
FEATURE	DAh
COUNT	N/A
LBA	**Bit** **Description** 27:24 N/A 23:8 C24Fh 7:0 N/A
DEVICE	**Bit** **Description** 7 Obsolete 6 N/A 5 Obsolete 4 Transport Dependent 3:0 Reserved
Command	7:0 B0h

Normal Outputs

Field	**Description**
ERROR	N/A
COUNT	N/A
LBA	N/A
DEVICE	**Bit** **Description** 7 Obsolete 6 N/A 5 Obsolete 4 Transport Dependent 3:0 Reserved
STATUS	**Bit** **Description** 7:6 Transport Dependent 5 DEVICE FAULT bit 4 N/A 3 Transport Dependent 2 N/A or ALIGNMENT ERROR bit 1 SENSE DATA AVAILABLE bit 0 ERROR bit

Error Outputs

See Error Outputs in Section 12.14 Idle (E3h / 97h)

.

12.61.1.11 SMART Enable/Disable Automatic Off-Line (Subcommand DBh)

This subcommand enables and disables the optional feature that causes the device to perform the set of off-line data collection activities that automatically collect attribute data in an off-line mode and then save this data to the device's non-volatile memory. This subcommand may either cause the device to automatically initiate or resume performance of its off-line data collection activities or cause the automatic off-line data collection feature to be disabled.

A value of zero written by the host into the device's Sector Count Register before issuing this subcommand shall cause the feature to be disabled. Disabling this feature does not preclude the device from saving attribute values to non-volatile memory during some other normal operation such as during a power-on or power-off sequence or during an error recovery sequence.

A value of F8h written by the host into the device's Sector Count Register before issuing this subcommand shall cause this feature to be enabled. Any other non-zero value written by the host into this register before issuing this subcommand is vender specific and will not change the current Automatic Off-Line Data Collection, but the device may respond with the error code specified in .

12.61.2 Device Attributes Data Structure

The following defines the 512 bytes that make up the Attribute Value information. This data structure is accessed by the host in its entirety using the SMART Read Attribute Values subcommand. All multi-byte fields shown in these data structures are in byte ordering, namely that the least significant byte occupies the lowest numbered byte address location in the field.

Table 260 Device Attribute Data Structure

Description	Bytes	Offset	Value
Data Structure Revision Number	2	00h	0010h
1st Device Attribute	12	02h	
…	..		
…	..		
30th Device Attribute	12	15Eh	
Off-line data collection status	1	16Ah	
Self-test execution status	1	16Bh	
Total time in seconds to complete off-line data collection activity	2	16Ch	
Vender specific	1	16Eh	
Off-line data collection capability	1	16Fh	1Bh
SMART capability	2	170h	0003h
SMART device error logging capability	1	172h	01h
Self-test failure check point	1	173h	
Short self-test completion time in minutes	1	174h	
Extended self-test completion time in minutes. If 0FFh, use bytes 177h and 178h for completion time.	1	175h	
Reserved	1	176h	
Extended self-test completion time in minutes. (word)	2	177h	
Reserved	9	179h	
Vendor specific	125	182h	
Data structure checksum	1	1FFh	
	512		

12.61.2.1 Data Structure Revision Number

The Data Structure Revision Number identifies which version of this data structure is implemented by the device. This revision number identifies both the Attribute Value and Attribute Threshold Data structures.

12.61.2.2 Individual Attribute Data Structure

The following defines the 12 bytes that make up the information for each Attribute entry in the Device Attribute Data Structure.

Table 261 Individual Attribute Data Structure

Description	Bytes	Offset
Attribute ID Number (01h to FFh)	1	00h
Status Flags	2	01h
Attribute Value (valid values from 01h to FDh)	1	03h
Vender specific	8	04h
Total Bytes	12	

Attribute ID Numbers: Any non-zero value in the Attribute ID Number indicates an active attribute. The device supports following Attribute ID Numbers.

ID	Attribute Name
0	Indicates that this entry in the data structure is not used
1	Raw Read Error Rate
2	Throughput Performance
3	Spin Up Time
4	Start/Stop Count
5	Reallocated Sector Count
7	Seek Error Rate
8	Seek Time Performance
9	Power-On Hours Count
10	Spin Retry Count
12	Device Power Cycle Count
22	Internal Environment status
90	NAND Health
192	Power off Retract count
193	Load Cycle count
194	Temperature
196	Reallocation Event Count
197	Current Pending Sector Count
198	Off-Line Scan Uncorrectable Sector Count
199	Ultra DMA CRC Error Count

Status Flag Definitions

Bit	Definition
0	Pre-failure/advisory bit
	0 An Attribute Value less than or equal to its corresponding Attribute Threshold indicates an advisory condition where the usage or age of the device has exceeded its intended design life period.
	1 An Attribute Value less than or equal to its corresponding attribute threshold indicates a pre-Failure condition where imminent loss of data is being predicted.
1	On-Line Collective bit
	0 The Attribute Value is updated only during Off-Line testing
	1 The Attribute Value is updated during On-Line testing or during both On-Line and Off-Line testing.
2-5	Vendor specific
6-15	Reserved (0)

Normalized Values: The device will perform conversion of the raw Attribute Values to transform them into normalized values, which the host can then compare with the Threshold values. A Threshold is the excursion limit for a normalized Attribute Value.

12.61.2.3 Off-Line Data Collection Status

The value of this byte defines the current status of the off-line activities of the device. Bit 7 indicates Automatic Off-Line Data Collection Status.

Bit 7	Automatic Off-Line Data Collection Status
0	Automatic Off-Line Data Collection is disabled.
1	Automatic Off-Line Data Collection is enabled.

Bits 0 thru 6 represent a hexadecimal status value reported by the device.

Value	Definition
0	Off-line data collection never started
2	All segments completed without errors
3	Off-line data collection is running
4	Off-line data collection suspended by interrupting command
5	Off-line data collecting aborted by interrupting command
6	Off-line data collection aborted with fatal error

12.61.2.4 Self-test execution status

Bit	Definition
0-3	Percent Self-test remaining An approximation of the percent of the self-test routine remaining until completion in ten percent increments. Valid values are 0 through 9.
4-7	Current Self-test execution status

0	The self-test routine completed without error or has never been run
1	The self-test routine aborted by the host
2	The self-test routine interrupted by the host with a hard or soft reset
3	The device was unable to complete the self-test routine due to a fatal error or unknown test error
4	The self-test routine completed with unknown element failure
5	The self-test routine completed with electrical element failure
6	The self-test routine completed with servo element failure
7	The self-test routine completed with read element failure
15	The self-test routine in progress

12.61.2.5 Total Time in Seconds to Complete Off-line Data Collection Activity

This field indicates to the host how many seconds the device requires to complete the off-line data collection activity.

12.61.2.6 Off-Line Data Collection Capability

Bit	Definition
0	Execute Off-line Immediate implemented bit
	0 SMART Execute Off-line Immediate subcommand is not implemented
	1 SMART Execute Off-line Immediate subcommand is implemented
1	Enable/disable Automatic Off-line implemented bit
	0 SMART Enable/disable Automatic Off-line subcommand is not implemented
	1 SMART Enable/disable Automatic Off-line subcommand is implemented
2	abort/restart off-line by host bit
	0 The device will suspend off-line data collection activity after an interrupting command and resume it after some vendor specific event
	1 The device will abort off-line data collection activity upon receipt of a new command
3	Off-line Read Scanning implemented bit
	0 The device does not support Off-line Read Scanning
	1 The device supports Off-line Read Scanning
4	Self-test implemented bit
	0 Self-test routine is not implemented
	1 Self-test routine is implemented
5	Reserved (0)
6	Selective self-test implemented bit
	0 Selective self-test routine is not implemented
	1 Selective self-test routine is implemented
7	Reserved (1)

12.61.2.7 SMART Capability

This word of bit flags describes the SMART capabilities of the device. The device will return 03h indicating that the device will save its Attribute Values prior to going into a power saving mode and supports the SMART ENABLE/DISABLE ATTRIBUTE AUTOSAVE command.

Bit	Definition
0	Pre-power mode attribute saving capability If bit = 1, the device will save its Attribute Values prior to going into a power saving mode (Standby or Sleep mode).
1	Attribute autosave capability If bit = 1, the device supports the SMART ENABLE/DISABLE ATTRIBUTE AUTOSAVE command.
2-15	Reserved (0)

12.61.2.8 Error Logging Capability

Bit	Definition
7-1	Reserved (0)
0	Error Logging support bit If bit = 1, the device supports the Error Logging

12.61.2.9 Self-test failure check point

This byte indicates the section of self-test where the device detected a failure.

12.61.2.10 Self-test completion time

These bytes are the minimum time in minutes to complete self-test.

12.61.2.11 Data Structure Checksum

The Data Structure Checksum is the 2’s compliment of the result of a simple 8-bit addition of the first 511 bytes in the data structure.

12.61.3 Device Attribute Thresholds Data Structure

The following defines the 512 bytes that make up the Attribute Threshold information. This data structure is accessed by the host in its entirety using the SMART Read Attribute Thresholds. All multi-byte fields shown in these data structures follow the ATA specification for byte ordering, namely that the least significant byte occupies the lowest numbered byte address location in the field.
The sequence of active Attribute Thresholds will appear in the same order as their corresponding Attribute Values.

Table 262 Device Attribute Thresholds Data Structure

Description	Bytes	Offset	Value
Data Structure Revision Number	2	00h	0010h
1st Attribute Threshold	12	02h	
…	..		
…	..		
30th Attribute Threshold	12	15Eh	
Reserved	18	16Ah	00h
Vendor specific	131	17Ch	00h
Data structure checksum	1	1FFh	
	512		

12.61.3.1 Data Structure Revision Number

This value is the same as the value used in the Device Attributes Values Data Structure.

12.61.3.2 Individual Thresholds Data Structure

The following defines the 12 bytes that make up the information for each Threshold entry in the Device Attribute Thresholds Data Structure. Attribute entries in the Individual Threshold Data Structure are in the same order and correspond to the entries in the Individual Attribute Data Structure.

Table 263 Individual Threshold Data Structure

Description	Bytes	Offset
Attribute ID Number (01h to FFh)	1	00h
Attribute Threshold	1	01h
Reserved (00h)	10	02h
Total Bytes	12	

12.61.3.3 Attribute ID Numbers

Attribute ID Numbers supported by the device are the same as Attribute Values Data Structures.

12.61.3.4 Attribute Threshold

These values are preset at the factory and are not meant to be changeable.

12.61.3.5 Data Structure Checksum

The Data Structure Checksum is the 2's compliment of the result of a simple 8-bit addition of the first 511 bytes in the data structure.

12.61.3.6 SMART Log Directory

The SMART Log Directory is SMART Log Address zero and is defined as one sector, 512 bytes, long.

Table 264 SMART Log Directory

Description	Bytes	Offset
SMART Logging Version	2	00h
Number of sectors in the log at log address 1	1	02h
Reserved	1	03h
Number of sectors in the log at log address 2	1	04h
Reserved	1	05h
…	…	…
Number of sectors in the log at log address 255	1	1Feh
Reserved	1	1FFh
	512	

The value of the SMART Logging Version word shall be 01h. The logs at log addresses 80-9Fh shall each be defined as 16 sectors long.

12.61.3.7 SMART summary error log sector

The following defines the 512 bytes that make up the SMART summary error log sector. All multi-byte fields shown in this data structure follow the ATA/ATAPI-7 specifications for byte ordering.

Table 265 SMART summary error log sector

Description	Bytes	Offset
SMART error log version	1	00h
Error log index	1	01h
1st error log data structure	90	02h
2nd error log data structure	90	5Ch
3rd error log data structure	90	B6h
4th error log data structure	90	110h
5th error log data structure	90	16Ah
Device error count	2	1C4h
Reserved	57	1C6h
Data structure checksum	1	1FFh
	512	

12.61.3.8 SMART error log version

This value is set to 01h.

12.61.3.9 Error log index

This points the most recent error log data structure. Only values 1 through 5 are valid.

12.61.3.10 Device error count

This field contains the total number of errors. The value will not roll over.

12.61.3.11 Error log data structure

Data format of each error log structure is shown below.

Table 266 Error log data structure

Description	Bytes	Offset
1st error log data structure	12	00h
2nd error log data structure	12	0Ch
3rd error log data structure	12	18h
4th error log data structure	12	24h
5th error log data structure	12	30h
Error data structure	30	3Ch
	90	

Table 267 Command data structure

Command data structure: Data format of each command data structure is shown below.

Description	Bytes	Offset
Device Control register	1	00h
Features register	1	01h
Sector count register	1	02h
Sector number register	1	03h
Cylinder Low register	1	04h
Cylinder High register	1	05h
Device/Head register	1	06h
Command register	1	07h
Timestamp (milliseconds from Power On)	4	08h
	12	

Table 268 Error data structure

Error data structure: Data format of error data structure is shown below.

Description	Bytes	Offset
Reserved	1	00h
Error register	1	01h
Sector count register	1	02h
Sector number register	1	03h
Cylinder Low register	1	04h
Cylinder High register	1	05h
Device/Head register	1	06h
Status register	1	07h
Extended error data (vendor specific)	19	08h
State	1	1Bh
Life timestamp (hours)	2	1Ch
	30	

State field contains a value indicating the device state when command was issued to the device.

Value	State
x0h	Unknown
x1h	Sleep
x2h	Standby (If the EPC feature set is enabled, Standby is standby_y or standby_z)
x3h	Active/Idle (If the EPC feature set is enabled, Active/Idle is idle_a or idle_b or idle_c)
x4h	SMART Off-line or Self-test
x5h-xAh	Reserved
xBh-xFh	Vendor specific

Note: The value of x is vendor specific.

12.61.3.12 Self-test log data structure

The following defines the 512 bytes that make up the Self-test log sector. All multi-byte fields shown in these data structures follow the ATA/ATAPI-7 specifications for byte ordering.

Table 269 Self-test log data structure

Description	Bytes	Offset
Data structure revision	2	00h
Self-test number	1	n*18h+02h
Self-test execution status	1	n*18h+03h
Lifetime power on hours	2	n*18h+04h
Self-test failure check point	1	n*18h+06h
LBA of first failure	4	n*18h+07h
Vendor specific	15	n*18h+0Bh
…		
Vendor specific	2	1Fah
Self-test index	1	1FCh
Reserved	2	1FDh
Data structure checksum	1	1FFh
	512	

Note: n is 0 through 20

The data structure contains the descriptor of Self-test that the device has performed. Each descriptor is 24 bytes long and the self-test data structure is capable to contain up to 21 descriptors.
After 21 descriptors have been recorded, the oldest descriptor will be overwritten with new descriptor.
Self-test index points the most recent descriptor. When there is no descriptor the value is 0. When there is descriptor(s) the value is 1 through 21.

12.61.3.13 Selective self-test log data structure

The Selective self-test log is a log that may be both written and read by the host. This log allows the host to select the parameters for the self-test and to monitor the progress of the self-test. The following table defines the contents of the Selective self-test log which is 512 bytes long. All multi-byte fields shown in these data structures follow the ATA/ATAPI-7 specifications for byte ordering.

Table 270 Selective self-test log data structure

Description	Bytes	Offset	Read/Write
Data structure revision	2	00h	R/W
Starting LBA for test span 1	8	02h	R/W
Ending LBA for test span 1	8	0Ah	R/W
Starting LBA for test span 2	8	12h	R/W
Ending LBA for test span 2	8	1Ah	R/W
Starting LBA for test span 3	8	22h	R/W
Ending LBA for test span 3	8	2Ah	R/W
Starting LBA for test span 4	8	32h	R/W
Ending LBA for test span 4	8	3Ah	R/W
Starting LBA for test span 5	8	42h	R/W
Ending LBA for test span 5	8	4Ah	R/W
Reserved	256	52h	Reserved
Vendor specific	154	152h	Vendor specific
Current LBA under test	8	1Ech	Read
Current span under test	2	1F4h	Read
Feature flags	2	1F6h	R/W
Vendor specific	4	1F8h	Vendor specific
Selective self-test pending time	2	1FCh	R/W
Reserved	1	1Feh	Reserved
Data structure checksum	1	1FFh	R/W
	512		

12.61.3.14 Feature flags

The Feature flags define the features of Selective self-test to be executed.

Table 271 Selective self-test feature flags

Bit	Description
0	Vendor specific
1	When set to one, perform off-line scan after selective test.
2	Vendor specific
3	When set to one, off-line scan after selective test is pending.
4	When set to one, off-line scan after selective test is active.
5-15	Reserved.

12.61.3.15 Error Reporting

The following table shows the values returned in the Status and Error Registers when specific error conditions are encountered by a device.

Table 272 SMART Error Codes

Error Condition	Status Register	Error Register
A SMART FUNCTION SET command was received by the device without the required key being loaded into the Cylinder High and Cylinder Low registers.	51h	04h
A SMART FUNCTION SET command was received by the device with a subcommand value in the Features Register that is either invalid or not supported by this device.	51h	04h
A SMART FUNCTION SET command subcommand other than SMART ENABLE OPERATIONS was received by the device while the device was in a “SMART disabled” state.	51h	04h
The device is unable to read its Attribute Values or Attribute Thresholds data structure.	51h	10h or 40h
The device is unable to write to its Attribute Values data structure.	51h	10h

12.62 Standby (E2h/96h)

The Standby command causes the device to enter the Standby Mode immediately and set auto power down timeout parameter (standby timer).
When the Standby mode is entered, the drive is spun down but the interface remains active. If the drive is already spun down, the spin down sequence is not executed.
During the Standby mode the device will respond to commands, but there is a delay while waiting for the spindle to reach operating speed.
The automatic power down sequence is enabled and the timer starts counting down when the drive returns to Idle mode.

If the EPC feature set is enabled, device enters into the Standby_Z power condition.

Standby timer period — Timeout Parameter. If zero, the timeout interval (Standby Timer) is disabled. If non-zero, then the automatic power down sequence is enabled, and the timeout interval is shown blow:

Value	Description
0	Timer disabled
1-240	Value * 5 seconds
241-251	(Value-240) * 30 minutes
252	21 minutes
253	8 hours
254	Aborted
255	21 minutes 15 seconds

When the automatic power down sequence is enabled, the drive will enter Standby mode automatically if the timeout interval expires with no drive access from the host. The timeout interval will be reinitialized if there is a drive access before the timeout interval expires.

Table 273 Standby Command (E2h/96h)

Command Input

Field	Description
FEATURE	N/A
COUNT	Standby timer period
LBA	N/A
DEVICE	**Bit** **Description** 7 Obsolete 6 N/A 5 Obsolete 4 Transport Dependent 3:0 Reserved
Command	7:0 E2h or 96h

Normal Outputs

See Normal Outputs in Section 12.9 Flush Cache (E7h)

Error Outputs

See Error Outputs in Section 12.14 Idle (E3h / 97h)

.

12.63 Standby Immediate (E0h/94h)

The Standby Immediate command causes the device to enter Standby mode immediately.
The device is spun down but the interface remains active. If the device is already spun down, the spin down sequence is not executed.
During the Standby mode, the device will respond to commands, but there is a delay while waiting for the spindle to reach operating speed.
The Standby Immediate command will not affect the auto power down timeout parameter.

If the EPC feature set is enabled, device enters into the Standby_Z power condition.

Table 274 Standby Immediate Command (E0h/94h)

Command Input

Field	Description
FEATURE	N/A
COUNT	N/A
LBA	N/A
DEVICE	**Bit** **Description** 7 Obsolete 6 N/A 5 Obsolete 4 Transport Dependent 3:0 Reserved
Command	7:0 E0h

Normal Outputs

See Normal Outputs in Section 12.9 Flush Cache (E7h)

Error Outputs

See Error Outputs in Section 12.14 Idle (E3h / 97h)

12.64 Trusted Receive (5Ch)

The Trusted Receive command reads one or more 512 byte packets from the drive. The returned packets depend on the Security Protocol selected (feature). See Trusted Command Feature for details.

The sectors are transferred through the Data Register 16 bits at a time.

Table 275 Trusted Receive Command (5Ch)

Command Input

Field	Description
FEATURE	SECURITY PROTOCOL
COUNT	TRANSFER LENGTH
LBA	**Bit** **Description** 27:24 Reserved 23:8 SP SPECIFIC (word) 7:0 TRANSFER LENGTH
DEVICE	**Bit** **Description** 7 Obsolete 6 N/A 5 Obsolete 4 Transport Dependent 3:0 Reserved
Command	7:0 E0h

Table 276 SECURITY PROTOCOL Field

Value	Description
00h	Return security protocol information
01h..06h	Reserved for TCG
08h..1Fh	Reserved for T10
20h..21h	Reserved
22h..3Fh	Reserved for T10
40h..E9h	Reserved
EAh	Reserved
EBh	Defined for SCSA
ECh	Reserved
EEh	Reserved
EFh	Reserved for T10
F0h..FFh	Vendor Specific

The SP SPECIFIC field provides information defined by the contents of the SECURITY PROTOCOL field. The meaning of this field is defined by each security protocol.
The TRANSFER LENGTH field is security protocol specific

Normal Outputs

See Normal Outputs in Section 12.9 Flush Cache (E7h)

Error Outputs

See Error Outputs in Section 12.14 Idle (E3h / 97h)

12.65 Trusted Receive DMA (5Dh)

The Trusted Receive DMA command reads one or more 512 byte packets from the drive. The returned packets depend on the Security Protocol selected (feature). See Trusted Command Feature for details.
The host initializes a slave-DMA channel prior to issuing the command. The data transfers are qualified by DMARQ and are performed by the slave-DMA channel. The device issues only one interrupt per command to indicate that data transfer has terminated and status is available

Table 277 Trusted Receive DMA Command (5Dh)

Command Block Output Registers								
Register	7	6	5	4	3	2	1	0
Data	-	-	-	-	-	-	-	-
Feature	V	V	V	V	V	V	V	V
Sector Count	V	V	V	V	V	V	V	V
Sector Number	V	V	V	V	V	V	V	V
Cylinder Low	V	V	V	V	V	V	V	V
Cylinder High	V	V	V	V	V	V	V	V
Device/Head	-	-	-	-	-	-	-	-
Command	0	1	0	1	1	1	0	1

Command Block Input Registers								
Register	7	6	5	4	3	2	1	0
Data	-	-	-	-	-	-	-	-
Error	…See Below…							
Sector Count	-	-	-	-	-	-	-	-
Sector Number	-	-	-	-	-	-	-	-
Cylinder Low	-	-	-	-	-	-	-	-
Cylinder High	-	-	-	-	-	-	-	-
Device/Head	-	-	-	-	-	-	-	-
Status	…See Below…							

Error Register							
7	6	5	4	3	2	1	0
CRC	UNC	0	IDN	0	ABT	T0N	AMN
0	0	0	0	0	V	0	0

Status Register							
7	6	5	4	3	2	1	0
BSY	RDY	DF	DSC	DRQ	COR	IDX	ERR
0	V	0	-	-	0	0	V

Normal Outputs

See Normal Outputs in Section 12.9 Flush Cache (E7h)

Error Outputs

See Error Outputs in Section 12.14 Idle (E3h / 97h).

12.66 Trusted Send (5Eh)

The Trusted Send command writes one or more 512 byte packets to the drive. The content of the packets depends on the Security Protocol selected (feature). See Trusted Command Feature for details.
The sectors are transferred through the Data Register 16 bits at a time.

Table 278 Trusted Send Command (5Eh)

Command Block Output Registers								
Register	7	6	5	4	3	2	1	0
Data	-	-	-	-	-	-	-	-
Feature	V	V	V	V	V	V	V	V
Sector Count	V	V	V	V	V	V	V	V
Sector Number	V	V	V	V	V	V	V	V
Cylinder Low	V	V	V	V	V	V	V	V
Cylinder High	V	V	V	V	V	V	V	V
Device/Head	-	-	-	-	-	-	-	-
Command	0	1	0	1	1	1	1	0

Command Block Input Registers								
Register	7	6	5	4	3	2	1	0
Data	-	-	-	-	-	-	-	-
Error	…See Below…							
Sector Count	-	-	-	-	-	-	-	-
Sector Number	-	-	-	-	-	-	-	-
Cylinder Low	-	-	-	-	-	-	-	-
Cylinder High	-	-	-	-	-	-	-	-
Device/Head	-	-	-	-	-	-	-	-
Status	…See Below…							

Error Register							
7	6	5	4	3	2	1	0
CRC	UNC	0	IDN	0	ABT	T0N	AMN
0	0	0	0	0	V	0	0

Status Register							
7	6	5	4	3	2	1	0
BSY	RDY	DF	DSC	DRQ	COR	IDX	ERR
0	V	0	-	-	0	0	V

Normal Outputs

See Normal Outputs in Section 12.9 Flush Cache (E7h)

Error Outputs

See Error Outputs in Section 12.14 Idle (E3h / 97h)

12.67 Trusted Send DMA (5Fh)

The Trusted Send DMA command writes one or more 512 byte packets to the drive. The content of the packets depends on the Security Protocol selected (feature). See Trusted Command Feature for details.
The host initializes a slave-DMA channel prior to issuing the command. The data transfers are qualified by DMARQ and are performed by the slave-DMA channel. The device issues only one interrupt per command to indicate that data transfer has terminated and status is available.

Table 279 Trusted Send DMA Command (5Fh)

Command Block Output Registers								
Register	7	6	5	4	3	2	1	0
Data	-	-	-	-	-	-	-	-
Feature	V	V	V	V	V	V	V	V
Sector Count	V	V	V	V	V	V	V	V
Sector Number	V	V	V	V	V	V	V	V
Cylinder Low	V	V	V	V	V	V	V	V
Cylinder High	V	V	V	V	V	V	V	V
Device/Head	-	-	-	-	-	-	-	-
Command	0	1	0	1	1	1	1	1

Command Block Input Registers								
Register	7	6	5	4	3	2	1	0
Data	-	-	-	-	-	-	-	-
Error	…See Below…							
Sector Count	-	-	-	-	-	-	-	-
Sector Number	-	-	-	-	-	-	-	-
Cylinder Low	-	-	-	-	-	-	-	-
Cylinder High	-	-	-	-	-	-	-	-
Device/Head	-	-	-	-	-	-	-	-
Status	…See Below…							

Error Register							
7	6	5	4	3	2	1	0
CRC	UNC	0	IDN	0	ABT	T0N	AMN
0	0	0	0	0	V	0	0

Status Register							
7	6	5	4	3	2	1	0
BSY	RDY	DF	DSC	DRQ	COR	IDX	ERR
0	V	0	-	-	0	0	V

Normal Outputs

See Normal Outputs in Section 12.9 Flush Cache (E7h)

Error Outputs

See Error Outputs in Section 12.14 Idle (E3h / 97h)

12.68 Write Buffer (E8h)

The Write Buffer command transfers a sector of data from the host to the sector buffer of the device. The sectors of data are transferred through the Data Register 16 bits at a time.

The Read Buffer and Write Buffer commands are synchronized such that sequential Write Buffer and Read Buffer commands access the same 512 bytes within the buffer.

Table 280 Write Buffer Command (E8h)

Command Input

Field	Description
FEATURE	N/A
COUNT	N/A
LBA	N/A
DEVICE	**Bit** **Description** 7 Obsolete 6 N/A 5 Obsolete 4 Transport Dependent 3:0 Reserved
Command	7:0 E8h

Normal Outputs

See Normal Outputs in Section 12.9 Flush Cache (E7h)

Error Outputs

See Error Outputs in Section 12.5 Download Microcode (92h)

12.69 Write Buffer DMA (EBh)

The Write Buffer DMA command transfers a sector of data from the host to the sector buffer of the device. The sectors of data are transferred through the Data Register 16 bits at a time.
The Read Buffer and Write Buffer commands are synchronized such that sequential Write Buffer and Read Buffer commands access the same 512 bytes within the buffer.

Table 281 Write Buffer DMA Command (EBh)

Command Input

Field	Description
FEATURE	N/A
COUNT	N/A
LBA	N/A
DEVICE	**Bit** **Description** 7 Obsolete 6 N/A 5 Obsolete 4 Transport Dependent 3:0 Reserved
Command	7:0 EBh

Normal Outputs

See Normal Outputs in Section 12.9 Flush Cache (E7h)

Error Outputs

See Error Outputs in Section 12.5 Download Microcode (92h)

12.70 Write DMA (CAh/CBh)

The Write DMA command transfers one or more sectors of data from the host to the device, then the data is written to the disk media. The sectors of data are transferred through the Data Register 16 bits at a time.
The host initializes a slave-DMA channel prior to issuing the command. Data transfers are qualified by DMARQ and are performed by the slave-DMA channel. The device issues only one interrupt per command to indicate that data transfer has terminated and status is available.
If an uncorrectable error occurs, the write will be terminated at the failing sector.

Table 282 Write DMA Command (CAh/CBh)

Command Input

Field	Description
FEATURE	N/A
COUNT	The number of logical sectors to be transferred. A value of 00h indicates that 256 logical sectors are to be transferred
LBA	LBA of first logical sector to be transferred
DEVICE	**Bit** **Description** 7:5 Obsolete 4 Transport Dependent 3:0 Reserved
Command	7:0 CAh or CBh

Normal Outputs

See Normal Outputs in Section 12.9 Flush Cache (E7h)

Error Outputs

Field	Description
ERROR	**Bit** **Description** 7 INTERFACE CRC bit 6:5 Obsolete 4 ID NOT FOUND bit 3 Obsolete 2 ABORT bit 1:0 Obsolete
COUNT	N/A
LBA	LBA of First Unrecoverable Error
DEVICE	**Bit** **Description** 7 Obsolete 6 N/A 5 Obsolete 4 Transport Dependent 3:0 Reserved
STATUS	**Bit** **Description** 7:6 Transport Dependent 5 DEVICE FAULT bit 4 N/A 3 Transport Dependent 2 N/A 1 SENSE DATA AVAILABLE bit 0 ERROR bit

12.71 Write DMA FUA Ext (3Dh)

The Write DMA FUA Ext command transfers one or more sectors of data from the host to the device, and then the data is written to the disk media. This command provides the same function as the Write DMA Ext command except that the transferred data shall be written to the media before the ending status for this command is reported also when write caching is enabled.
The sectors of data are transferred through the Data Register 16 bits at a time.

The host initializes a slave-DMA channel prior to issuing the command. Data transfers are qualified by DMARQ and are performed by the slave-DMA channel. The device issues only one interrupt per command to indicate that data transfer has terminated and status is available.

If an unrecoverable error occurs, the write will be terminated at the failing sector.

Table 283 Write DMA FUA Ext Command (3Dh)

Command Input

Field	Description
FEATURE	Reserved
COUNT	The number of logical sectors to be transferred. A value of 0000h indicates that 65,536 logical sectors are to be transferred
LBA	LBA of first logical sector to be transferred
DEVICE	**Bit Description** 7 Obsolete 6 Shall be set to one 5 Obsolete 4 Transport Dependent 3:0 Reserved
Command	7:0 3Dh

Output Parameters To The Device

Sector Count Current	The number of continuous sectors to be transferred low order, bits (7:0).
Sector Count Previous	The number of continuous sectors to be transferred high order bits (15:8). If zero is specified in the Sector Count register, then 65,536 sectors will be transferred.
Sector Number Current	LBA (7:0).
Sector Number Previous	LBA (31:24).
Cylinder Low Current	LBA (15:8).
Cylinder Low Previous	LBA (39:32).
Cylinder High Current	LBA (23:16).
Cylinder High Previous	LBA (47:40).

Input Parameters From The Device

Sector Number (HOB=0)	LBA (7:0) of the address of the first unrecoverable error.
Sector Number (HOB=1)	LBA (31:24) of the address of the first unrecoverable error.
Cylinder Low (HOB=0)	LBA (15:8) of the address of the first unrecoverable error.
Cylinder Low (HOB=1)	LBA (39:32) of the address of the first unrecoverable error.
Cylinder High (HOB=0)	LBA (23:16) of the address of the first unrecoverable error.
Cylinder High (HOB=1)	LBA (47:40) of the address of the first unrecoverable error.

Normal Outputs

See Normal Outputs in Section 12.10 Flush Cache Ext (EAh)

Error Outputs

Field	Description
ERROR	**Bit** **Description** 7 INTERFACE CRC bit 6:5 Obsolete 4 ID NOT FOUND bit 3 Obsolete 2 ABORT bit 1 Obsolete 0 N/A
COUNT	Reserved
LBA	LBA of First Unrecoverable Error
DEVICE	**Bit** **Description** 7 Obsolete 6 N/A 5 Obsolete 4 Transport Dependent 3:0 Reserved
STATUS	**Bit** **Description** 7:6 Transport Dependent 5 DEVICE FAULT bit 4 N/A 3 Transport Dependent 2 N/A 1 SENSE DATA AVAILABLE bit 0 ERROR bit

12.72 Write DMA Ext (35h)

The Write DMA Ext command transfers one or more sectors of data from the host to the device, and then the data is written to the disk media. The sectors of data are transferred through the Data Register 16 bits at a time.
The host initializes a slave-DMA channel prior to issuing the command. Data transfers are qualified by DMARQ and are performed by the slave-DMA channel. The device issues only one interrupt per command to indicate that data transfer has terminated and status is available.

If an uncorrectable error occurs, the write will be terminated at the failing sector.

Table 284 Write DMA Ext Command (35h)

Command Input

Field	Description
FEATURE	Reserved
COUNT	The number of logical sectors to be transferred. A value of 0000h indicates that 65,536 logical sectors are to be transferred
LBA	LBA of first logical sector to be transferred
DEVICE	**Bit** **Description** 7:5 Obsolete 4 Transport Dependent 3:0 Reserved
Command	7:0 35h

Output Parameters To The Device

Sector Count Current	The number of continuous sectors to be transferred low order, bits (7:0).
Sector Count Previous	The number of continuous sectors to be transferred high order bits (15:8). If zero is specified in the Sector Count register, then 65,536 sectors will be transferred.
Sector Number Current	LBA (7:0).
Sector Number Previous	LBA (31:24).
Cylinder Low Current	LBA (15:8).
Cylinder Low Previous	LBA (39:32).
Cylinder High Current	LBA (23:16).
Cylinder High Previous	LBA (47:40).

Input Parameters From The Device

Sector Number (HOB=0)	LBA (7:0) of the address of the first unrecoverable error.
Sector Number (HOB=1)	LBA (31:24) of the address of the first unrecoverable error.
Cylinder Low (HOB=0)	LBA (15:8) of the address of the first unrecoverable error.
Cylinder Low (HOB=1)	LBA (39:32) of the address of the first unrecoverable error.
Cylinder High (HOB=0)	LBA (23:16) of the address of the first unrecoverable error.
Cylinder High (HOB=1)	LBA (47:40) of the address of the first unrecoverable error.

Normal Outputs

See Normal Outputs in Section 12.10 Flush Cache Ext (EAh)

Error Outputs

See Error Outputs in Section 12.71 Write DMA FUA Ext (3Dh)

12.73 Write FPDMA Queued (61h)

The Write FPDMA Queued command transfers one or more sectors of data from the host to the device, and then the data is written to the disk media.
If an unrecoverable error occurs, the write will be terminated at the failing sector.

Table 285 Write FPDMA Queued Command (61h)

Command Input

Field	Description
FEATURE	The number of logical sectors to be transferred. A value of 0000h indicates that 65536 logical sectors are to be transferred
COUNT	**Bit** **Description** 15:14 PRIO field 13:8 Reserved 7:3 NCQ TAG field 2:0 Reserved
LBA	LBA of first logical sector to be transferred
ICC	7:0 ICC field
DEVICE	**Bit** **Description** 7 FUA bit 6 Shall be set to one 5 Reserved 4 Shall be cleared to zero 3:0 Reserved
Command	7:0 61h

FUA bit
When the FUA bit is set to 1, the completion status is indicated after the transferred data are written to the media also when Write Cache is enabled.
When the FUA bit is set to 0, the completion status may be indicated before the transferred data are written to the media successfully when Write Cache is enabled.
ICC field
The Isochronous Command Completion (ICC) field is valid when PRIO is set to a value of 01b. It is assigned by the host based on the intended deadline associated with the command issued. When a deadline has expired, the device continues to complete the command as soon as possible. The host can modify this behavior if the device supports the NCQ Non-Data command (see Section 12.17) and supports the Deadline Handling subcommand (see Section 12.17.2). This subcommand allows the host to set whether the device aborts commands that have exceeded the time set in ICC.

There are several parameters encoded in the ICC field: Fine or Coarse timing, Interval, and the Max Time. The Interval indicates the time units of the Time Limit parameter.

If ICC Bit 7 cleared to zero, then the time interval is fine-grained.
Interval = 10msec
Time Limit = (ICC[6:0] + 1) * 10 msec

If ICC Bit 7 is set to one (coarse encoding), then the time interval is coarse grained.
Interval = 0.5 sec
Time Limit = (ICC[6:0] + 1) * 0.5 sec

PRIO bit
The Priority (PRIO) value shall be assigned by the host based on the priority of the command issued. The device makes a best effort to complete High priority requests in a more timely fashion than Normal and isochronous priority requests. The device tries to complete isochronous requests prior to its associated deadline. The Priority values are defined as follows:
00b Normal priority
01b Isochronous – deadline dependent priority
10b High priority

NCQ TAG

The TAG value shall be assigned to be different from all other queued commands. The value shall not exceed the maximum queue depth specified by the Word 75 of the Identify Device information

Normal Outputs

See Normal Outputs in Section 12.24 Read FPDMA Queued (60h)

Error Outputs

See Error Outputs in Section 12.24 Read FPDMA Queued (60h)

.

12.74 Write Log Ext (3Fh)

This command writes a specified number of 512 byte data sectors to the specific log. The device shall interrupt for each DRQ block transferred.

Table 286 Write Log Ext Command (3Fh)

Command Input

Field	Description
FEATURE	Reserved
COUNT	LOG PAGE COUNT field
LBA	**Bit** **Description** 47:40 Reserved 39:32 PAGE NUMBER field (15:8) 31:16 Reserved 15:8 PAGE NUMBER field (7:0) 7:0 LOG ADDRESS field – specifies the log to be written
DEVICE	**Bit** **Description** 7 Obsolete 6 N/A 5 Obsolete 4 Transport Dependent – See Section 9.2.9 3:0 Reserved
Command	7:0 3Fh

LOG PAGE COUNT field
The LOG PAGE COUNT field specifies the number of log pages that shall be written to the specified log. If the number is zero, or the number is greater than the number indicated in the GPL Directory, the device shall return command aborted.
PAGE NUMBER field
The PAGE NUMBER field specifies the first page number to be written to the specified log

Error Outputs
A drive returns command aborted for the command if:

a) the LOG PAGE COUNT field is cleared to zero;
b) the feature set associated with the log specified in the LOG ADDRESS field is not supported or not enabled;
c) the values in the FEATURE field, LOG PAGE COUNT field, or LBA field (47:8) are invalid;
d) the host attempts to write to a read only log; or
e) the value in the PAGE NUMBER field plus the value in the LOG PAGE COUNT field is larger than the log size reported in the GPL Directory.

If the log data is not available or a data structure checksum error occurred, then the device shall return command completion for the command with the ID NOT FOUND bit set to one.

A drive may return command completion with the ERROR bit set to one if an Interface CRC error has occurred

Normal Outputs

See Normal Outputs in Section 12.10 Flush Cache Ext (EAh)

Error Outputs

Field	Description
ERROR	**Bit** **Description** 7 INTERFACE CRC bit 6:5 Obsolete 4 ID NOT FOUND bit 3 Obsolete 2 ABORT bit 1 Obsolete 0 N/A
COUNT	Reserved
LBA	Reserved
DEVICE	**Bit** **Description** 7 Obsolete 6 N/A 5 Obsolete 4 Transport Dependent 3:0 Reserved
STATUS	**Bit** **Description** 7:6 Transport Dependent 5 DEVICE FAULT bit 4 N/A 3 Transport Dependent 2 N/A 1 SENSE DATA AVAILABLE bit 0 ERROR bit

12.75 Write Log DMA Ext (57h)

The content of this command is the same as Write Log Ext. See Section 12.74.

Table 287 Write Log DMA Ext Command (57h)

Command Input

Field	Description
FEATURE	Reserved
COUNT	LOG PAGE COUNT field
LBA	**Bit** **Description** 47:40 Reserved 39:32 PAGE NUMBER field (15:8) 31:16 Reserved 15:8 PAGE NUMBER field (7:0) 7:0 LOG ADDRESS field – specifies the log to be written
DEVICE	**Bit** **Description** 7 Obsolete 6 N/A 5 Obsolete 4 Transport Dependent – See Section 9.2.9 3:0 Reserved
Command	7:0 57h

Normal Outputs

See Normal Outputs in Section 12.10 Flush Cache Ext (EAh)

Error Outputs

See Error Outputs in Section 12.74 Write Log Ext (3Fh)

12.76 Write Multiple (C5h)

The Write Multiple command transfers one or more sectors from the host to the device, and then the data is written to the disk media.

Command execution is identical to the Write Sector(s) command except that an interrupt is generated for each block (as defined by the Set Multiple command) instead of for each sector. The sectors are transferred through the Data Register 16 bits at a time.

Table 288 Write Multiple Command (C5h)

Command Input

Field	Description
FEATURE	N/A
COUNT	The number of logical sectors to be transferred. A value of 00h indicates that 256 logical sectors are to be transferred
LBA	LBA of first logical sector to be transferred
DEVICE	**Bit** **Description** 7:5 Obsolete 4 Transport Dependent 3:0 Reserved
Command	7:0 C5h

Normal Outputs

See Normal Outputs in Section 12.9 Flush Cache (E7h)

Error Outputs

Field	Description
ERROR	**Bit** **Description** 7 INTERFACE CRC bit 6:5 Obsolete 4 ID NOT FOUND bit 3 Obsolete 2 ABORT bit 1:0 Obsolete
COUNT	N/A
LBA	LBA of First Unrecoverable Error
DEVICE	**Bit** **Description** 7 Obsolete 6 N/A 5 Obsolete 4 Transport Dependent 3:0 Reserved
STATUS	**Bit** **Description** 7:6 Transport Dependent 5 DEVICE FAULT bit 4 N/A 3 Transport Dependent 2 N/A 1 SENSE DATA AVAILABLE bit 0 ERROR bit

12.77 Write Multiple Ext (39h)

The Write Multiple Ext command transfers one or more sectors from the host to the device, and then the data is written to the disk media.

Command execution is identical to the Write Sector(s) Ext command except that an interrupt is generated for each block (as defined by the Set Multiple command) instead of for each sector. The sectors are transferred through the Data Register 16 bits at a time.

Table 289 Write Multiple Ext Command (39h)

Command Input

Field	Description
FEATURE	Reserved
COUNT	The number of logical sectors to be transferred. A value of 0000h indicates that 65,536 logical sectors are to be transferred
LBA	LBA of first logical sector to be transferred
DEVICE	**Bit** **Description** 7 Obsolete 6 Shall be set to one 5 Obsolete 4 Transport Dependent 3:0 Reserved
Command	7:0 39h

Normal Outputs

See Normal Outputs in Section 12.10 Flush Cache Ext (EAh)

Error Outputs

See Error Outputs in Section 12.71 Write DMA FUA Ext (3Dh)

12.78 Write Multiple FUA Ext (CEh)

The Write Multiple Ext command transfers one or more sectors from the host to the device, and then the data is written to the disk media. This command provides the same function as the Write Multiple Ext command except that the transferred data shall be written to the media before the ending status for this command is reported also when write caching is enabled.
Command execution is identical to the Write Sector(s) Ext command except that an interrupt is generated for each block (as defined by the Set Multiple command) instead of for each sector. The sectors are transferred through the Data Register 16 bits at a time.

Table 290 Write Multiple FUA Ext Command (CEh)

Command Input

Field	Description
FEATURE	Reserved
COUNT	The number of logical sectors to be transferred. A value of 0000h indicates that 65536 logical sectors are to be transferred
LBA	LBA of first logical sector to be transferred
DEVICE	**Bit Description** 7 Obsolete 6 Shall be set to one 5 Obsolete 4 Transport Dependent 3:0 Reserved
Command	7:0 CEh

Normal Outputs

See Normal Outputs in Section 12.10 Flush Cache Ext (EAh)

Error Outputs

See Error Outputs in Section 12.71 Write DMA FUA Ext (3Dh)

12.79 Write Sector(s) (30h/31h)

The Write Sector(s) command transfers one or more sectors from the host to the device, and then the data is written to the disk media.
The sectors are transferred through the Data Register 16 bits at a time.

If an uncorrectable error occurs, the write will be terminated at the failing sector.

Table 291 Write Sector(s) Command (30h/31h)

Command Input

Field	Description
FEATURE	Reserved
COUNT	The number of logical sectors to be transferred. A value of 0000h indicates that 65 536 logical sectors are to be transferred
LBA	LBA of first logical sector to be transferred
DEVICE	**Bit Description** 7 Obsolete 6 Shall be set to one 5 Obsolete 4 Transport Dependent 3:0 Reserved
Command	7:0 30h or 31h

Output Parameters To The Device

Sector Count The number of continuous sectors to be transferred. If zero is specified, then 256 sectors will be transferred.

Sector Number This register contains LBA bits 0 - 7.

Cylinder High/Low This register contains LBA bits 8 - 15 (Low), 16 - 23 (High).

H This register contains LBA bits 24 - 27.

R The retry bit, but this bit is ignored.

Input Parameters From The Device

Sector Count The number of requested sectors not transferred. This will be zero unless an unrecoverable error occurs.

Sector Number This register contains current LBA bits 0 - 7.

Cylinder High/Low This register contains current LBA bits 8 - 15 (Low), 16 - 23 (High).

H This register contains current LBA bits 24 - 27.

Normal Outputs

See Normal Outputs in Section 12.10 Flush Cache Ext (EAh)

Error Outputs

See Error Outputs in Section 12.71 Write DMA FUA Ext (3Dh)

12.80 Write Sector(s) Ext (34h)

The Write Sector(s) Ext command transfers one or more sectors from the host to the device, and then the data is written to the disk media.
The sectors are transferred through the Data Register 16 bits at a time.

If an uncorrectable error occurs, the write will be terminated at the failing sector.

Table 292 Write Sector(s) Ext Command (34h)

Command Input

Field	Description
FEATURE	Reserved
COUNT	The number of logical sectors to be transferred. A value of 0000h indicates that 65,536 logical sectors are to be transferred
LBA	LBA of first logical sector to be transferred
DEVICE	**Bit Description** 7 Obsolete 6 Shall be set to one 5 Obsolete 4 Transport Dependent 3:0 Reserved
Command	7:0 34h

Normal Outputs

See Normal Outputs in Section 12.10 Flush Cache Ext (EAh)

Error Outputs

See Error Outputs in Section 12.71 Write DMA FUA Ext (3Dh)

.

12.81 Write Stream DMA Ext (3Ah)

The Write Stream DMA Ext command allows the host to write data using the DMA data transfer protocol. This command allows for the host to specify to the device that additional actions need to be performed prior to the completion of the command if the required bits are set.

If the Write Continuous bit is set to one, the device shall not stop execution of the command due to errors. If the WC bit is set to one and errors occur in the transfer or writing of the data, the device shall continue to transfer the amount of data requested and then provide ending status with the BSY bit cleared to zero, the SE bit set to one, the ERR bit cleared to zero, and the type of error, ICRC, IDNF, or ABRT, reported in the error log. If the WC bit is set to one and the Command Completion Time Limit expires, the device shall stop execution of the command and provide ending status with BSY bit cleared to zero, the SE bit set to one, the ERR bit cleared to zero, and report the fact that the Command Completion Time Limit expired by setting the CCTO bit in the error log to one, In all cases, the device shall attempt to transfer the amount of data requested within the Command Completion Time Limit event if some data transferred is in error.

Table 293 Write Stream DMA Ext Command (3Ah)

Command Block Output Registers									
Register		7	6	5	4	3	2	1	0
Data Low		-	-	-	-	-	-	-	-
Data High		-	-	-	-	-	-	-	-
Feature	Current	V	V	V	V	-	V	V	V
	Previous	V	V	V	V	V	V	V	V
Sector Count	Current	V	V	V	V	V	V	V	V
	Previous	V	V	V	V	V	V	V	V
Sector Number	Current	V	V	V	V	V	V	V	V
	Previous	V	V	V	V	V	V	V	V
Cylinder Low	Current	V	V	V	V	V	V	V	V
	Previous	V	V	V	V	V	V	V	V
Cylinder High	Current	V	V	V	V	V	V	V	V
	Previous	V	V	V	V	V	V	V	V
Device/Head		1	1	1	D	-	-	-	-
Command		0	0	1	1	1	0	1	0

Command Block Input Registers									
Register		7	6	5	4	3	2	1	0
Data Low		-	-	-	-	-	-	-	-
Data High		-	-	-	-	-	-	-	-
Error		...See Below...							
Sector Count	HOB=0	-	-	-	-	-	-	-	-
	HOB=1	-	-	-	-	-	-	-	-
Sector Number	HOB=0	V	V	V	V	V	V	V	V
	HOB=1	V	V	V	V	V	V	V	V
Cylinder Low	HOB=0	V	V	V	V	V	V	V	V
	HOB=1	V	V	V	V	V	V	V	V
Cylinder High	HOB=0	V	V	V	V	V	V	V	V
	HOB=1	V	V	V	V	V	V	V	V
Device/Head		-	-	-	-	-	-	-	-
Status		...See Below...							

Error Register							
7	6	5	4	3	2	1	0
CRC	UNC	0	IDN	0	ABT	T0N	CCTO
V	0	0	V	0	V	0	V

Status Register							
7	6	5	4	3	2	1	0
BSY	RDY	SE	DWE	DRQ	COR	IDX	ERR
0	V	V	0	-	0	-	V

Output Parameters To The Device

Feature Current

URG (bit7)	URG specifies an urgent transfer request. The Urgent bit specifies that the command should be completed in the minimum possible time by the device and shall be completed within the specified Command Completion Time Limit.
WC (bit6)	WC specifies Write Continuous mode enabled. If the Write Continuous bit is set to one, the device shall not stop execution of the command due to errors. If the WC bit is set to one and errors occur in transfer or writing of the data, the device shall continue to transfer the amount of data requested and then provide ending status with BSY bit cleared to zero, the SE bit set to one, the ERR bit cleared to zero, and the type of error, ICRC, IDNF or ABRT reported in the error log. If the WC bit is set to one and the Command Completion Time Limit expires, the device shall stop execution of the command and provide ending status with the BSY bit cleared to zero, the SE bit set to one, the ERR bit cleared to zero, and report the fact that the Command Completion Time Limit expired by setting the CCTO bit in the error log to one. In all cases, the device shall attempt to transfer the amount of data requested within the Command Completion Time Limit even if some data transferred is in error.
F (bit5)	F specifies that all data for the specified stream shall be flushed to the media before command complete is reported when set to one.
HSE (bit4)	HSE (Handle Stream Error) specifies that this command starts at the LBA of the last reported error for this stream, so the device may attempt to continue its corresponding error recovery sequence where it left off earlier.
Stream ID (bit 0..2)	Stream ID specifies the stream being written. The device shall operate according to the Stream ID set by the Write Stream command.
Feature Previous	The time allowed for the current command's completion is calculated as follows:
CCTL (7:0)	Command Completion Time Limit = (content of the Feature register Previous) * (Identify Device words (99:98)) u seconds If the value is zero, the device shall use the Default CCTL supplied with a previous Configure Stream command for this Stream ID. If the Default CCTL is zero, or no previous Configure Stream command was defined for this Stream ID, the device will ignore the CCTL. The time is measured from the write of the command register to the final INTRQ for command completion. The device has minimum CCTL value. When the specified value is shorter than the minimum value, CCTL is set to the minimum value. Actual minimum CCTL value is described in the “Deviations from Standard” section.
Sector Count Current	The number of continuous sectors to be transferred low order, bits (7:0)
Sector Count Previous	The number of continuous sectors to be transferred high order, bits (15:8). If zero is specified in the Sector Count register, then 65,536 sectors will be transferred.
Sector Number Current	LBA (7:0).
Sector Number Previous	LBA (31:24).
Cylinder Low Current	LBA (15:8).
Cylinder Low Previous	LBA (39:32).
Cylinder High Current	LBA (23:16).
Cylinder High Previous	LBA (47:40).

Input Parameters From The Device

Sector Number (HOB=0)	LBA (7:0) of the address of the first unrecoverable error.
Sector Number (HOB=1)	LBA (31:24) of the address of the first unrecoverable error.
Cylinder Low (HOB=0)	LBA (15:8) of the address of the first unrecoverable error.
Cylinder Low (HOB=1)	LBA (39:32) of the address of the first unrecoverable error.
Cylinder High (HOB=0)	LBA (23:16) of the address of the first unrecoverable error.
Cylinder High (HOB=1)	LBA (47:40) of the address of the first unrecoverable error.
CCTO (Error, bit 0)	CCTO bit shall be set to one if a Command Completion Time Limit Out error has occurred.

12.82 Write Stream Ext (3Bh)

This command writes from 1 to 65536 sectors as specified in the Sector Count register. A sector count of 0 requests 65536 sectors.

If the Write Continuous bit is set to one, the device shall not stop execution of the command due to errors. If the WC bit is set to one and errors occur in the transfer or writing of the data, the device shall continue to transfer the amount of data requested and then provide ending status with the BSY bit cleared to zero, the SE bit set to one, the ERR bit cleared to zero, and the type of error, IDNF, or ABRT, reported in the error log. If the WC bit is set to one and the Command Completion Time Limit expires, the device shall stop execution of the command and provide ending status with BSY bit cleared to zero, the SE bit set to one, the ERR bit cleared to zero, and report the fact that the Command Completion Time Limit expired by setting the CCTO bit in the error log to one, In all cases, the device shall attempt to transfer the amount of data requested within the Command Completion Time Limit event if some data transferred is in error.

Table 294 Write Stream Ext Command (3Bh)

Command Block Output Registers									
Register		7	6	5	4	3	2	1	0
Data Low		-	-	-	-	-	-	-	-
Data High		-	-	-	-	-	-	-	-
Feature	Current	V	V	V	V	-	V	V	V
	Previous	V	V	V	V	V	V	V	V
Sector Count	Current	V	V	V	V	V	V	V	V
	Previous	V	V	V	V	V	V	V	V
Sector Number	Current	V	V	V	V	V	V	V	V
	Previous	V	V	V	V	V	V	V	V
Cylinder Low	Current	V	V	V	V	V	V	V	V
	Previous	V	V	V	V	V	V	V	V
Cylinder High	Current	V	V	V	V	V	V	V	V
	Previous	V	V	V	V	V	V	V	V
Device/Head		1	1	1	D	-	-	-	-
Command		0	0	1	1	1	0	1	1

Command Block Input Registers									
Register		7	6	5	4	3	2	1	0
Data Low		-	-	-	-	-	-	-	-
Data High		-	-	-	-	-	-	-	-
Error		...See Below...							
Sector Count	HOB=0	-	-	-	-	-	-	-	-
	HOB=1	-	-	-	-	-	-	-	-
Sector Number	HOB=0	V	V	V	V	V	V	V	V
	HOB=1	V	V	V	V	V	V	V	V
Cylinder Low	HOB=0	V	V	V	V	V	V	V	V
	HOB=1	V	V	V	V	V	V	V	V
Cylinder High	HOB=0	V	V	V	V	V	V	V	V
	HOB=1	V	V	V	V	V	V	V	V
Device/Head		-	-	-	-	-	-	-	-
Status		...See Below...							

Error Register							
7	6	5	4	3	2	1	0
CRC	UNC	0	IDN	0	ABT	T0N	CCTO
V	0	0	V	0	V	0	V

Status Register							
7	6	5	4	3	2	1	0
BSY	RDY	SE	DWE	DRQ	COR	IDX	ERR
0	V	V	0	-	0	-	V

Output Parameters To The Device

Feature Current

URG (bit7) URG specifies an urgent transfer request. The Urgent bit specifies that the command should be completed in the minimum possible time by the device and shall be completed within the specified Command Completion Time Limit.

WC (bit6) WC specifies Write Continuous mode enabled. If the Write Continuous bit is set to one, the device shall not stop execution of the command due to errors.

If the WC bit is set to one and errors occur in transfer or writing of the data, the device shall continue to transfer the amount of data requested and then provide ending status with BSY bit cleared to zero, the SE bit set to one, the ERR bit cleared to zero, and the type of error, IDNF or ABRT reported in the error log.

If the WC bit is set to one and the Command Completion Time Limit expires, the device shall stop execution of the command and provide ending status with the BSY bit cleared to zero, the SE bit set to one, the ERR bit cleared to zero, and report the fact that the Command Completion Time Limit expired by setting the CCTO bit in the error log to one.

In all cases, the device shall attempt to transfer the amount of data requested within the Command Completion Time Limit even if some data transferred is in error.

F (bit5) F specifies that all data for the specified stream shall be flushed to the media before command complete is reported when set to one.

HSE (bit4) HSE (Handle Stream Error) specifies that this command starts at the LBA of the last reported error for this stream, so the device may attempt to continue its corresponding error recovery sequence where it left off earlier.

Stream ID (bit 0..2) Stream ID specifies the stream being written. The device shall operate according to the Stream ID set by the Write Stream command.

Feature Previous The time allowed for the current command's completion is calculated as follows:

Command Completion Time Limit = (content of the Feature register Previous) * (Identify Device words (99:98)) u seconds

If the value is zero, the device shall use the Default CCTL supplied with a previous Configure Stream command for this Stream ID. If the Default CCTL is zero, or no previous Configure Stream command was defined for this Stream ID, the device will ignore the CCTL. The time is measured from the write of the command register to the final INTRQ for command completion. The device has minimum CCTL value. When the specified value is shorter than the minimum value, CCTL is set to the minimum value. Actual minimum CCTL value is described in the “Deviations from Standard” section.

Sector Count Current The number of continuous sectors to be transferred low order, bits (7:0)

Sector Count Previous The number of continuous sectors to be transferred high order, bits (15:8). If zero is specified in the Sector Count register, then 65,536 sectors will be transferred.

Sector Number Current LBA (7:0).

Sector Number Previous LBA (31:24).

Cylinder Low Current LBA (15:8).

Cylinder Low Previous LBA (39:32).

Cylinder High Current LBA (23:16).

Cylinder High Previous LBA (47:40).

Input Parameters From The Device

Sector Number (HOB=0)	LBA (7:0) of the address of the first unrecoverable error.
Sector Number (HOB=1)	LBA (31:24) of the address of the first unrecoverable error.
Cylinder Low (HOB=0)	LBA (15:8) of the address of the first unrecoverable error.
Cylinder Low (HOB=1)	LBA (39:32) of the address of the first unrecoverable error.
Cylinder High (HOB=0)	LBA (23:16) of the address of the first unrecoverable error.
Cylinder High (HOB=1)	LBA (47:40) of the address of the first unrecoverable error.
CCTO (Error, bit 0)	CCTO bit shall be set to one if a Command Completion Time Limit Out error has occurred.

12.83 Write Uncorrectable Ext (45h)

Table 295 Write Uncorrectable Ext Command (45h)

Command Input

Field	Description
FEATURE	**Bit** **Description** 15:8 Reserved 7:0 Uncorrectable options Value Description 00h-54h Reserved 55h Create a pseudo-uncorrectable error with logging 56h-59h Reserved 5Ah Vendor specific 5Bh-A4h Reserved A5h Vendor Specific A6h-A9h Reserved AAh Create a flagged error without logging ABh-FFh Reserved
COUNT	The number of logical sectors to be marked = 01h
LBA	LBA of first logical sector to be marked. In case that the device supports Host Managed Zones feature set (see Section 4.20.3): If LBA belongs to a sequential write required zone, LBA must be less than that zone's write pointer LBA
DEVICE	**Bit** **Description** 7 Obsolete 6 Shall be set to one 5 Obsolete 4 Transport Dependent 3:0 Reserved
Command	7:0 45h

Note:

1) Pseudo uncorrectable sector (FEATURE = 55h) is processed like a flagged sector with the exception that the device waits a predefined period of time before posting uncorrectable error. Time value is equivalent to the amount of time for full step recovery.
2) As part of reading a pseudo uncorrectable logical sector (FEATURE = 55h), the device performs no error logging.

Normal Outputs

See Normal Outputs in Section 12.9 Flush Cache (E7h)

Error Outputs

See Error Outputs in Section 12.14 Idle (E3h / 97h)
If the device is unable to process a Write Uncorrectable EXT command (45h) for any reason, the device shall abort the command.

12.84 Zone Activate Ext (4Ah/08h)

Table 296 Zone Activate Ext Command (4Ah/08h)

Command Input

Field	Description
FEATURE	**Bit** **Description** 15:8 OTHER ZONE DOMAIN field 7 ALL bit 6 Reserved 5 NOZSRC bit 4:0 ZM_ACTION field - shall be set to 08h
COUNT	RETURN PAGE COUNT field
LBA	ZONE ID field
AUXILIARY(31:16)	AUXNOZ field
DEVICE	**Bit** **Description** 7 Obsolete 6 Shall be set to one 5 Obsolete 4 Transport Dependent – See ACS-5 3: 0 Reserved
Command	7:0 4Ah

The Zone Activate Ext command may activate a zone range in one zone domain and may deactivate corresponding zones in one or more different zone domains.

The Zone Activate Ext command requires an input that specifies the number of zones to be processed. The following methods are defined for the host to use when sending the number of zones to be processed to the device:

a) a single command process where the host sets the NOZSRC bit to one and sets the AUXNOZ field to the number of zones to be processed in the Zone Activate Ext command; and
b) a two command process where the host:
   1) sends a Zone Activation Control subcommand of Set Features command (see Section 12.55) to set the SUBSEQUENT NUMBER OF ZONES field to the number of zones to be processed; and
   2) clears the NOZSRC bit to zero in the subsequent Zone Query Ext command or the subsequent Zone Activate Ext command.

For the Zone Activate Ext command, the device shall:

1) process any errors defined for command inputs outside normal outputs for this command that result in the command being aborted (e.g., the ZONE ID field processing defined in Section 12.84.3), and if that processing results in the command being aborted, then do not process step 2), step 3), step 4), and step 5);
2) check the command inputs for prerequisites reported by sense codes, and if any of the prerequisites are not met:
   A) not transfer any data to the host;
   B) return command completion with error, with the additional sense code set to INVALID FIELD IN CDB (see ACS-5); and
   C) not process step 3), step 4), and step 5);
3) select the zone ranges to be activated and the zone ranges to be deactivated;
4) check the zone ranges to be activated and the zone ranges to be deactivated for prerequisites reported in the Zone Activation Results Header, and if any of the prerequisites are not met:
   A) transfer the Zone Activation Results Header to the host;
   B) transfer the Zone Activation Descriptors to the host;
   C) return command complete with no error; and
   D) not process step 5);

and

5) process the specified zone activation request.

12.84.1 OTHER ZONE DOMAIN ID field

The OTHER ZONE DOMAIN ID field, combined with other command inputs, determines the zone range to be activated and the zone range to be deactivated as described in Section 12.84.7.

12.84.2 ALL bit

The ALL bit, combined with other command inputs, determines the zone range to be activated and the zone range to be deactivated as described in Section 12.84.7.

12.84.3 NOZSRC field

The NOZSRC bit specifies where the device obtains the number of zones to be processed by this Zone Activate Ext command.

If the NOZSRC bit is cleared to zero then:

a) the AUXNOZ field (see Table 296) is ignored; and

b) the number of zones to be processed by this command is the value of the SUBSEQUENT NUMBER OF ZONES field.

If the NOZSRC bit is set to one and the NOZSRC SUPPORTED bit is:

a) cleared to zero, then the device shall return command aborted with the additional sense code set to INVALID FIELD IN CDB (see ACS-5); and

b) set to one, then:

A) the number of zones to be processed by this command is the value of the AUXNOZ field; and

B) the SUBSEQUENT NUMBER OF ZONES field is ignored.

12.84.4 RETURN PAGE COUNT field

The RETURN PAGE COUNT field specifies the number of pages of data requested to be returned. The device shall return the number of 512-byte pages specified in the RETURN PAGE COUNT field. Pad bytes are appended as needed to meet this requirement. Pad bytes shall have a value of 00h.

Unless otherwise specified, if the RETURN PAGE COUNT field specifies fewer 512-byte pages than the device has available to return, then the device:

a) shall truncate the returned data to the specified number of 512-byte pages; and

b) shall not modify any of the returned zone activation results descriptor data as a result of the truncation.

If the RETURN PAGE COUNT field specifies more 512-byte pages than the device has available to return, then 512 bytes of all zeros shall be returned for those pages for which the device has no data to return.

The value 0000h is reserved in the RETURN PAGE COUNT field.

12.84.5 AUXNOZ field

The AUXNOZ field is processed as described in Section 12.84.3**.**

Normal Outputs

See Normal Outputs in Section 12.9 Flush Cache (E7h)

Error Outputs

See Error Outputs in Section 12.14 Idle (E3h / 97h)

12.84.6 Input From the Device to the Host Data Structure

Table 297 describes the zone activation results returned by the ZONE ACTIVATE EXT command and the ZONE QUERY EXT command (see Section 12.85).

Table 297 Zone Activation Results

Offset	Description
0..63	Zone Activation Results Header
64..95	Zone Activation descriptor 0
96..127	Zone Activation descriptor 1
…	…
y..y+31	Zone Activation descriptor N (N is the number of Zone Activation descriptors minus 1) (y is the contents of the ZONE ACTIVATION RESULTS RETURNED field)
	Padding (See usage in Section 12.40.4.4)

12.84.6.1 Zone Activation Results Header

The Zone Activation Results Header is described in Table 298.

Table 298 Zone Activation Results Header

Offset	Type	Description
0..3	DWord	ZONE ACTIVATION RESULTS LENGTH field
4..7	DWord	ZONE ACTIVATION RESULTS RETURNED field
8	Byte	Results summary **Bits** **Description** 7 NZP_VALIDITY bit 6 ZIWUP_VALIDITY bit 5:1 Reserved 0 ACTIVATED bit
9	Byte	Unmet Prerequisites **Bits** **Description** 7 Reserved 6 SECURITY PREREQ bit 5 MULTIPLE DOMAINS bit 4 REALM RESTRICTIONS bit 3 MULTIPLE ZONE TYPES bit 2 REALM ALIGNMENT bit 1 NOT EMPTY bit 0 NOT INACTIVE bit
10	Byte	OTHER ZONE DOMAIN ID field
11		Reserved
12	Byte	Command options **Bits** **Description** 7:2 Reserved 1 NOZSRC field 0 ALL bit
13..15		Reserved
16..19	DWord	Number of zones to process **Bits** **Description** 31:28 Reserved 27:0 NUMBER OF ZONES TO PROCESS field
20..23		Reserved
24..31	QWord	A zone with a prerequisite that has not been met **Bits** **Description** 63:48 Reserved 47:0 ZONE ID WITH UNMET PREREQUISITE field
32..63		Reserved

12.84.6.1.1 ZONE ACTIVATION RESULTS LENGTH field

The ZONE ACTIVATION RESULTS LENGTH field contains the length in bytes of the Zone Activation Descriptors available to be returned in the Zone Activation Results data.
The value does not include the length of the Zone Activation Results Header.
The value shall not be altered based on the RETURN PAGE COUNT field.

12.84.6.1.2 ZONE ACTIVATION RESULTS RETURNED field

The ZONE ACTIVATION RESULTS RETURNED field contains the length in bytes of the Zone Activation Descriptors that are returned by this command.
The value does not include the length of the Zone Activation Results Header.
The value may be altered based on the RETURN PAGE COUNT field to ensure that only complete Zone Activation Descriptors are returned.

12.84.6.1.2.1 NZP_VALIDITY bit

The NZP_VALIDITY bit is:
a) set to one, then the NUMBER OF ZONES TO PROCESS field is valid; and
b) cleared to zero, then the NUMBER OF ZONES TO PROCESS field is not valid.

12.84.6.1.2.2 ZIWUP_VALIDITY bit

The ZIWUP_VALIDITY bit indicates whether or not the ZONE ID WITH UNMET PREREQUISITE field is valid.
If the ZIWUP_VALIDITY bit is:
a) set to one, then the ZONE ID WITH UNMET PREREQUISITE field contains valid data; and
b) cleared to zero, then the ZONE ID WITH UNMET PREREQUISITE field shall be cleared to zero.

12.84.6.1.2.3 ACTIVATED bit

If the command is a ZONE ACTIVATE EXT command and the ACTIVATED bit is:
a) set to one, then the specified activation occurred; and
b) cleared to zero, then no zones were changed.
If the command is a ZONE QUERY EXT command, then:
a) the ACTIVATED bit is cleared to zero; and
b) no zones were changed.

12.84.6.1.2.4 SECURITY PREREQ bit

If the SECURITY PREREQ bit is:
a) cleared to zero, then all security prerequisite conditions were met; and
b) set to one, then at least one security prerequisite condition was not met.

12.84.6.1.2.5 MULTIPLE DOMAINS bit

If the MULTIPLE DOMAINS bit is:
a) cleared to zero, then all multiple zone domain prerequisites were met; and
b) set to one, then the candidate zones to be activated include zones that are in more than one zone domain.

12.84.6.1.2.6 REALM RESTRICTIONS bit

If the REALM RESTRICTIONS bit is:
a) cleared to zero, then all realm attribute prerequisites for activation and deactivation were met;
or
b) set to one, then Restrict Zone Activate realm attribute is true for a realm that contains any of candidate zones to be:
A) activated; or
B) deactivated.

12.84.6.1.2.7 MULTIPLE ZONE TYPES bit

If the MULTIPLE ZONE TYPES bit is:
a) cleared to zero, then all prerequisites for deactivating zone types were met; and
b) set to one, then the candidate zones to be activated include more than one zone type.

12.84.6.1.2.8 REALM ALIGNMENT bit

If the Zone Realms feature set is supported, and the REALM ALIGNMENT bit is:
a) cleared to zero, then there are no unmet realm alignment prerequisites; and
b) set to one, then the candidate zones:
    A) do not start at the beginning of a realm; or
    B) do not end at the end of a realm;
If the Zone Realms feature set is not supported, then the REALM ALIGNMENT bit shall be cleared to zero.

12.84.6.1.2.9 NOT EMPTY bit

If the NOT EMPTY bit is:
a) cleared to zero, then all Zone Condition prerequisites for deactivating zones (e.g., EMPTY) were met; and
b) set to one and the ALL bit in the Zone Activation Results Header is:
    A) cleared to zero, then the candidate zones to be deactivated (see Section 12.84.7), if any, contains a zone with a Zone Condition other than EMPTY or INACTIVE; and
    B) set to one, then at least one of the candidate zones to be deactivated has a Zone Condition of CLOSED, EXPLICITLY OPENED, IMPLICITLY OPENED, or FULL.

12.84.6.1.2.10 NOT INACTIVE bit

If the NOT INACTIVE bit is:
a) cleared to zero, then all Zone Condition prerequisites for activating zones (e.g., INACTIVE) were met; and
b) set to one, and the ALL bit (see Section 12.84.2) in the Zone Activation Results Header is:
    A) cleared to zero, then one or more candidate zones to be activated do not have a Zone Condition of INACTIVE; and
    B) set to one, then:
        a) no candidate zone to be activated has a Zone Condition of INACTIVE; or
        b) some candidate zones to be activated have a Zone Condition of IMPLICITLY OPENED, or FULL.

12.84.6.1.3 OTHER ZONE DOMAIN ID field

The OTHER ZONE DOMAIN ID field in the Zone Activation Results Header is a copy of the OTHER ZONE DOMAIN ID field in the ZONE ACTIVATE EXT command inputs or the ZONE QUERY EXT command inputs.

12.84.6.1.4 NOZSRC field

The NOZSRC bit in the Zone Activation Results Header is a copy of the NOZSRC bit in the ZONE ACTIVATE EXT command inputs or the ZONE QUERY EXT command inputs.

12.84.6.1.4.1 ALL bit

The ALL bit in the Zone Activation Results Header is a copy of the ALL bit in the ZONE ACTIVATE EXT command inputs or the ZONE QUERY EXT command inputs.

12.84.6.1.5 NUMBER OF ZONES TO PROCESS field

The NUMBER OF ZONES TO PROCESS field in the Zone Activation Results Header indicates the number of zones that the host requested be processed in the ZONE ACTIVATE EXT command or the ZONE QUERY EXT command.
If the ALL bit in the Zone Activation Results Header is:
a) set to one, then:
    A) the NZP_VALIDITY bit shall be cleared to zero; and
    B) the NUMBER OF ZONES TO PROCESS field shall be cleared to zero;
and
b) cleared to zero, and the NOZSRC bit in the Zone Activation Results Header is:
    A) cleared to zero, then:
        a) the NZP_VALIDITY bit shall be set to one; and

b) the NUMBER OF ZONES TO PROCESS field contains the value in the SUBSEQUENT NUMBER OF ZONES field

B) set to one, then:

a) the NZP_VALIDITY bit shall be set to one; and

b) the NUMBER OF ZONES TO PROCESS field contains the value in the AUXNOZ field in the ZONE ACTIVATE EXT command inputs or the ZONE QUERY EXT command inputs.

12.84.6.1.6 ZONE ID WITH UNMET PREREQUISITE field

If the ZIWUP_VALIDITY bit is set to one, then the ZONE ID WITH UNMET PREREQUISITE field indicates the zone ID of the lowest numbered zone associated with a prerequisite that has not been met.

12.84.6.2 Zone Activation Descriptor

The ACTIVATED bit in the Zone Activation Results Header indicates what is described by each Zone Activation Descriptor. If the ACTIVATED bit is:

a) set to one, then each Zone Activation Descriptor indicates one zone range that has been activated or deactivated by the ZONE ACTIVATE EXT command returning that descriptor; or

b) cleared to zero, then each Zone Activation Descriptor indicates one zone range that may be activated or deactivated by a subsequent ZONE ACTIVATE EXT command with command inputs that are identical to those for the command that is returning that descriptor.

If the ALL bit is cleared to zero, then Zone Activation Descriptors are returned by a ZONE ACTIVATE EXT command or a ZONE QUERY EXT command that:

a) does not detect unmet prerequisites that are reported in the Zone Activation Results Header; or

b) detects only unmet prerequisites that are reported in the Zone Activation Results Header with the result that one or more of the following bits are set to one:

A) the SECURITY PREREQ bit;

B) the NOT EMPTY bit; or

C) the NOT INACTIVE bit.

Zone Activation Descriptors are not returned by a ZONE ACTIVATE EXT command or a ZONE QUERY EXT command that:

a) has the ALL bit set to one; or

b) detects any unmet prerequisites that are reported in the Zone Activation Results Header with the result that one or more of the following bits are set to one:

A) the MULTIPLE DOMAINS bit;

B) the REALM RESTRICTIONS bit;

C) the MULTIPLE ZONE TYPES bit; or

D) the REALM ALIGNMENT bit.

The format of the Zone Activation Descriptor is shown in Table 299.

Table 299 Zone Activation Descriptor

Offset	Type	Description
0	Byte	**Bits** **Description** 7:4 Reserved 3:0 ZONE TYPE field
1	Byte	**Bits** **Description** 7:4 ZONE CONDITION field 3:0 Reserved
2	Byte	ZONE DOMAIN ID field
3..7		Reserved
8..15	QWord	ZONE RANGE SIZE field
16..23	QWord	Starting zone locator **Bits** **Description** 63:48 Reserved 47:0 STARTING ZONE LOCATOR field
24..31		Reserved

12.84.6.2.1 ZONE TYPE field

The ZONE TYPE field in the Zone Activation Descriptor indicates the zone type (see Table 299) for all zones described by this Zone Activation Descriptor.

12.84.6.2.2 ZONE CONDITION field

The ZONE CONDITION field in the Zone Activation Descriptor indicates the Zone Condition (see Table 300) for all zones described by this Zone Activation Descriptor.

12.84.6.2.3 ZONE DOMAIN ID field

The ZONE DOMAIN ID field in the Zone Activation Descriptor indicates the zone domain ID for all zones described by this Zone Activation Descriptor.

12.84.6.2.4 ZONE RANGE SIZE field

The ZONE RANGE SIZE field in the Zone Activation Descriptor indicates the number of zones described by this Zone Activation Descriptor.

12.84.6.2.5 STARTING ZONE LOCATOR field

The STARTING ZONE LOCATOR field in the Zone Activation Descriptor indicates the lowest LBA of the first zone described by this Zone Activation Descriptor.

12.84.7 Selecting the candidate zones to activate and deactivate

If the ALL bit is set to one, then:

a) the candidate zones to activate are all zones in the zone domain specified by the OTHER ZONE DOMAIN ID field that are associated with a Restrict Zone Activate realm attribute that is false; and

b) the candidate zones to deactivate are zones that are:
   A) in any zone domain except the zone domain specified by the OTHER ZONE DOMAIN ID field; and
   B) associated with a Restrict Zone Activate realm attribute that is false.

If the ALL bit is cleared to zero, then:

a) the specified zone range is the set of zones starting with the value of the ZONE ID field (see Table 296) and extending for the number of zones specified by:
   A) the SUBSEQUENT NUMBER OF ZONES field in the IDENTIFY DEVICE data log, if the NOZSRC bit is cleared to zero; or
   B) the AUXNOZ field, if the NOZSRC bit is set to one;

and

b) Table 300 defines the candidate zones to activate and the candidate zones to deactivate.

Table 300 Selecting candidate zones to activate and deactivate with ALL bit cleared to zero

Zone Conditions in the specified zone range	**Candidate zones to activate**	**Candidate zones to deactivate**
All specified zones are inactive zones	The OTHER ZONE DOMAIN ID field is ignored.	The zone domain and candidate zones with a Zone Condition of EMPTY to deactivate are determined by the device using the realm and zone domain of the specified zone range.
All specified zones are active zones	The zone domain to activate is specified by the OTHER ZONE DOMAIN ID field. The candidate zones with a Zone Condition of INACTIVE to activate are determined by the device using the realm and zone domain of the zone range that is specified to be deactivated.	The zone domain to deactivate is the zone domain of the specified zone range. The candidate zones to deactivate are the zones in the specified zone range.
Some specified zones are active zones and some specified zones are inactive zones	n/a	The candidate zones to activate are the specified zone range so that an error is able to be reported.

12.84.8 Prerequisites reported by sense codes

If the ALL bit is set to one and the value of the OTHER ZONE DOMAIN ID field is not a valid zone domain ID, then prerequisites reported by sense code are not met.

If the ALL bit is cleared to zero, and:

a) the RETURN PAGE COUNT field is cleared to zero;

b) the number of zones to be processed is zero;

c) any zones specified by the ZONE ID field and the number of zones to be processed:
   A) contain one or more LBAs that are greater than the zoned maximum address; or
   B) are associated with a Restrict Zone Activate realm attribute (see Section 12.84.6.1.2.6) that is true;

or

d) the OTHER ZONE DOMAIN ID field:
   A) is not ignored; and
   B) contains a value that is not a valid zone domain ID,

then prerequisites reported by sense code are not met.

12.84.9 Prerequisites reported in the Zone Activation Results Header

If the ALL bit is:

a) set to one, then the device shall:

A) set the SECURITY PREREQ bit (see Section 12.84.6.1) to one if:

a) the device is in the SEC4: Security Enabled/Locked/Not Frozen state (see ACS-5); or

b) the candidate zones to be:

A) activated, if any; or

B) deactivated, if any, have any security restrictions (e.g., specified by a TCG security protocol);

B) set the NOT EMPTY bit (see Section 12.84.6.1) to one if the candidate zones to be deactivated, if any, has a Zone Condition of CLOSED, EXPLICITLY OPENED, IMPLICITLY OPENED, or FULL; and

C) set the NOT INACTIVE bit to one if the candidate zones to be activated, if any, has a Zone Condition of CLOSED, EXLICITLY OPENED, IMPLICITLY OPENED, or FULL;

or

b) cleared to zero, then the device shall:

A) set the SECURITY PREREQ bit to one if:

a) the device is in the SEC4: Security Enabled/Locked/Not Frozen state (see ACS-5); or

b) the candidate zones to be:

A) activated, if any; or

B) deactivated, if any, have any security restrictions;

B) set the MULTIPLE DOMAINS bit if;

a) the candidate zones to be activated, if any; or

b) the candidate zones to be deactivated, if any, includes zones in more than one zone domain;

C) set the REALM RESTRICTIONS bit to one, if the Restrict Zone Activate realm attribute is true for a realm that contains candidate zones to be:

a) activated, if any; or

b) deactivated, if any;

D) set the MULTIPLE ZONE TYPES bit to one, if the candidate zones to be activated, if any, contains more than one zone type;

E) set the REALM ALIGNMENT bit to one if the Zone Realms feature set (see Section 10.21) is supported, and the specified candidate zones:

a) does not start at the beginning of a realm; or

b) does not end at the end of a realm;

F) set the NOT EMPTY bit if the candidate zones to be deactivated, if any, contain one or more zones with a Zone Condition other than EMPTY or INACTIVE;

and

G) set the NOT INACTIVE bit if the candidate zones to be activated (see Section 12.84.6.1), if any, contain one or more zones with a Zone Condition that is not INACTIVE.

The prerequisite conditions reported in the Zone Activation Results Header are not met if one or more of the following bits are set to one:

a) the SECURITY PREREQ bit;

b) the MULTIPLE DOMAINS bit;

c) the REALM RESTRICTIONS bit;

d) the MULTIPLE ZONE TYPES bit;

e) the REALM ALIGNMENT bit;

f) the NOT EMPTY bit; or

g) the NOT INACTIVE bit.

12.84.10 Zone Activation processing

If the device did not detect any:
  a) unmet prerequisites reported by sense codes; or
  b) unmet prerequisites in the Zone Activation Results Header,
then the device shall:
  a) process the zones in the specified zone range in the order of starting LBA, using:
    A) the candidate zones to be activated, if any, as the zones to activate; and
    B) the candidate zones to be deactivated, if any, as the zones to deactivate;
  b) process zone activations and deactivations as follows, if the Zone Realms feature set is:
    A) not supported, then for each zone in the specified zone range:
      a) activate all of the zones in the zone range to be activated by changing the Zone Condition to EMPTY; and
      b) deactivate all of the zones in the zone range to be deactivated by changing the Zone Condition to INACTIVE;
    and
    B) supported, then for each zone in the zone range associated with each specified realm:
      a) activate all of the zones in the realm's zone range to be activated by changing the Zone Condition to EMPTY; and
      b) deactivate all of the zones in the realm's zone range to be deactivated by changing the Zone Condition to INACTIVE;
  c) set the ACTIVATED bit to:
    A) one, if all zones were successfully processed; and
    B) zero, if no zones were activated or deactivated as a result of this command;
  d) transfer the Zone Activation Results Header (see Section 12.84.6.1) to the host;
  e) transfer one Zone Activation Descriptor (see Section 12.84.6.2) to the host for each zone range activated or deactivated; and
  f) return command complete.

If the device processes any reset (e.g., power-on reset) during the ZONE ACTIVATE EXT command and the Zone Realms feature set is:
  a) not supported, then:
    A) all zones to be:
      a) activated have been activated; and
      b) deactivated have been deactivated;
    or
    B) no zones to be:
      a) activated have been activated; and
      b) deactivated have been deactivated;
  and
  b) supported, then for each realm:
    A) all zones in that realm to be:
      a) activated have been activated; and
      b) deactivated have been deactivated;
    or
    B) no zones in that realm to be:
      a) activated have been activated; and
      b) deactivated have been deactivated.

12.85 Zone Query Ext (4Ah/09h)

The Zone Query Ext command requires an input that specifies the number of zones to be processed. The following methods are defined for the host to use when sending the number of zones to be processed to the device:

a) a single command process where the host sets the NOZSRC bit to one and sets the AUXNOZ field to the number of zones to be processed in the ZONE QUERY EXT command
and

b) a two command process where the host:

1) sends a Zone Activation Control subcommand of SET FEATURES command (see Section 12.55) to set the SUBSEQUENT NUMBER OF ZONES field to the number of zones to be processed

and

2) clears the NOZSRC bit to zero in the subsequent ZONE QUERY EXT command or the subsequent ZONE ACTIVATE EXT command.

Table 301 Zone Query Ext Command (4Ah/09h)

Command Input

Field	Description
FEATURE	**Bit** **Description** 15:8 OTHER ZONE DOMAIN field 7 ALL bit 6 Reserved 5 NOZSRC bit 4:0 ZM_ACTION field - shall be set to 09h
COUNT	RETURN PAGE COUNT field
LBA	ZONE ID field
AUXILIARY(31:16)	AUXNOZ field
DEVICE	**Bit** **Description** 7 Obsolete 6 Shall be set to one 5 Obsolete 4 Transport Dependent – See ACS-5 3:0 Reserved
Command	7:0 4Ah

12.85.1 OTHER ZONE DOMAIN ID field

See Section 12.84.1.

12.85.2 ALL bit

See Section 12.84.2.

12.85.3 NOZSRC field

See Section 12.84.3.

12.85.4 RETURN PAGE COUNT field

See Section 12.84.4.

12.85.5 AUXNOZ field

The AUXNOZ field is processed as described in Section 12.84.3.

Normal Outputs

See Normal Outputs in Section 12.9 Flush Cache (E7h)

Error Outputs

See Error Outputs in Section 12.14 Idle (E3h / 97h)

12.85.6 Input From the Device to the Host Data Structure

See Section 12.84.6.

12.85.7 Selecting the candidate zones to activate and deactivate

See Section 12.84.7.

12.85.8 Prerequisites reported by sense codes

See Section 12.84.8.

12.85.9 Prerequisites reported in the Zone Activation Results Header

See Section 12.84.9.

13 Appendix. Sense key and Additional Sense code list

The following table shows the description of the combination of Sense Key / Sense Code / Qualifier (Additional Sense Code). Refer to Section 9.2 for a description of the Status field and to Section 9.3 for a description of the Error field. A value of 'v' in the Status or Error Field indicates the value of this bit will vary, depending on the error condition.

Table 302 Sense key / code / qualifier / status /error

Key	Code	Qual	Description	Status Field								Error Field							
				BSY	RDY	DF	NA	REQ	ALG	SDA	ERR	CRC	UNC	OBS	IDN	OBS	ABT	OBS	CCT
0	00	00	No Additional Sense Information	0	1	0	1	0	0	0	0	0	0	0	0	0	0	0	0
0	00	20	Deferred Microcode Is Pending	0	1	0	1	0	0	0	0	0	0	0	0	0	0	0	0
0	0B	14	SMART: Head Health Warning	0	1	0	1	0	0	0	0	0	0	0	0	0	0	0	0
0	5D	00	Head Integrity Check Error	0	1	0	1	0	0	0	0	0	0	0	0	0	0	0	0
0	5D	01	SMART Temperature Warning	0	1	0	1	0	0	0	0	0	0	0	0	0	0	0	0
0	5D	03	SMART Background Self-Test Failure	0	1	0	1	0	0	0	0	0	0	0	0	0	0	0	0
0	5D	04	SMART Background Pre-Scan Failure	0	1	0	1	0	0	0	0	0	0	0	0	0	0	0	0
0	5D	05	SMART: Background Media Scan Failure	0	1	0	1	0	0	0	0	0	0	0	0	0	0	0	0
0	5D	06	SMART: NVC EPO Failure	0	1	0	1	0	0	0	0	0	0	0	0	0	0	0	0
0	5D	10	General Hardware Error	0	1	0	1	0	0	0	0	0	0	0	0	0	0	0	0
0	5D	20	Flash Scan Error	0	1	0	1	0	0	0	0	0	0	0	0	0	0	0	0
0	5D	21	Milli-Actuator Error	0	1	0	1	0	0	0	0	0	0	0	0	0	0	0	0
0	5D	22	Extreme Over-Temperature Warning	0	1	0	1	0	0	0	0	0	0	0	0	0	0	0	0
0	5D	33	SMART: Load Retry Warning	0	1	0	1	0	0	0	0	0	0	0	0	0	0	0	0
0	5D	34	SMART: Head Load Time Warning	0	1	0	1	0	0	0	0	0	0	0	0	0	0	0	0
0	5D	35	SMART: Heads Loaded Time Warning	0	1	0	1	0	0	0	0	0	0	0	0	0	0	0	0
0	5D	50	Load/Unload cycle Count Warning	0	1	0	1	0	0	0	0	0	0	0	0	0	0	0	0
0	5D	5B	Spinup Retry Count Warning	0	1	0	1	0	0	0	0	0	0	0	0	0	0	0	0
0	5D	5C	CCB Error	0	1	0	1	0	0	0	1	0	0	0	0	0	1	0	0
0	5D	62	Read/Write Error Rate Warning	0	1	0	1	0	0	0	0	0	0	0	0	0	0	0	0
0	5D	63	Seek Error Rate Warning	0	1	0	1	0	0	0	0	0	0	0	0	0	0	0	0
0	5D	64	Spare Sector Availability Warning	0	1	0	1	0	0	0	0	0	0	0	0	0	0	0	0
0	5D	66	Spinup Time Warning	0	1	0	1	0	0	0	0	0	0	0	0	0	0	0	0
0	5D	69	SMART: Throughput Warning	0	1	0	1	0	0	0	0	0	0	0	0	0	0	0	0
0	5D	6A	SMART: Seek Time Warning	0	1	0	1	0	0	0	0	0	0	0	0	0	0	0	0
0	5D	9C	SMART: Drive Health Monitor Warning	0	1	0	1	0	0	0	0	0	0	0	0	0	0	0	0
0	5D	FD	SMART: Helium Leak Warning	0	1	0	1	0	0	0	0	0	0	0	0	0	0	0	0
0	5D	FF	Test Warning Threshold Reached	0	1	0	1	0	0	0	0	0	0	0	0	0	0	0	0
0	5E	01	Idle_A Condition activated by timer	0	1	0	1	0	0	0	0	0	0	0	0	0	0	0	0
0	5E	02	Standby_Z Condition activated by timer	0	1	0	1	0	0	0	0	0	0	0	0	0	0	0	0
0	5E	03	Idle_A Condition activated by Command	0	1	0	1	0	0	0	0	0	0	0	0	0	0	0	0
0	5E	04	Standby_Z Condition activated by Command	0	1	0	1	0	0	0	0	0	0	0	0	0	0	0	0
0	5E	05	Idle_B Condition activated by timer	0	1	0	1	0	0	0	0	0	0	0	0	0	0	0	0

Key	Code	Qual	Description	Status Field								Error Field							
				BSY	RDY	DF	NA	REQ	ALG	SDA	ERR	CRC	UNC	OBS	IDN	OBS	ABT	OBS	CCT
0	5E	06	Idle_B Condition activated by Command	0	1	0	1	0	0	0	0	0	0	0	0	0	0	0	0
0	5E	07	Idle_C Condition activated by timer	0	1	0	1	0	0	0	0	0	0	0	0	0	0	0	0
0	5E	08	Idle_C Condition activated by Command	0	1	0	1	0	0	0	0	0	0	0	0	0	0	0	0
0	5E	09	Standby_Y Condition activated by timer	0	1	0	1	0	0	0	0	0	0	0	0	0	0	0	0
0	5E	0A	Standby_Y Condition activated by Command	0	1	0	1	0	0	0	0	0	0	0	0	0	0	0	0
1	00	1D	ATA Pass-through requested check	0	1	0	1	0	0	0	0	0	0	0	0	0	0	0	0
1	02	00	No Seek Complete	0	1	0	1	0	0	0	1	1	1	1	0	1	1	1	0
1	03	00	Peripheral Device Write Fault	0	1	0	1	0	0	0	v	v	v	v	0	v	v	v	0
1	09	00	Track Following Error	0	1	0	1	0	0	0	1	1	1	1	0	1	1	1	0
1	0B	14	Warning - Physical Element Status Change	0	1	0	1	0	0	0	0	0	0	0	0	0	0	0	0
1	0C	01	Recovered Write Error with Auto Reallocation - Auto Reallocated	0	1	0	1	0	0	0	1	1	1	1	0	1	1	1	0
1	0C	03	Recovered Write Error - Recommend Reassignment	0	1	0	1	0	0	0	1	1	1	1	0	1	1	1	0
1	10	02	Recovered Application Tag Error	0	1	0	1	0	0	0	1	1	1	1	0	1	1	1	0
1	10	03	Recovered Reference Tag Error	0	1	0	1	0	0	0	1	1	1	1	0	1	1	1	0
1	11	14	Recovered LBA Write Correctable Error	0	1	0	1	0	0	0	1	1	1	1	0	1	1	1	0
1	15	00	Random Positioning Error	0	1	0	1	0	0	0	1	1	1	1	0	1	1	1	0
1	16	00	Data Synchronization Mark Error	0	1	0	1	0	0	0	1	1	1	1	0	1	1	1	0
1	16	01	Data Sync Error - Data Rewritten	0	1	0	1	0	0	0	1	1	1	1	0	1	1	1	0
1	16	02	Data Sync Error - Recommend Rewrite	0	1	0	1	0	0	0	1	1	1	1	0	1	1	1	0
1	16	03	Data Sync Error - Auto Reallocated	0	1	0	1	0	0	0	1	1	1	1	0	1	1	1	0
1	16	04	Data Sync Error - Recommend Reassignment	0	1	0	1	0	0	0	1	1	1	1	0	1	1	1	0
1	17	00	Recovered ATA Stream Error	0	v	v	v	0	0	0	v	v	v	v	0	v	v	v	0
1	17	01	Recovered Data with Retries	0	1	0	1	0	0	0	v	1	1	1	0	1	1	1	0
1	17	06	Recovered Data Without LDPC - Data Auto-Reallocated	0	1	0	1	0	0	0	1	1	1	1	0	1	1	1	0
1	17	07	Recovered Data Without LDPC - Recommend Reassignment	0	1	0	1	0	0	0	1	1	1	1	0	1	1	1	0
1	17	08	Recovered Data Without LDPC - Recommend Rewrite	0	1	0	1	0	0	0	1	1	1	1	0	1	1	1	0
1	17	09	Recovered Data Without LDPC - Data Rewritten	0	1	0	1	0	0	0	1	1	1	1	0	1	1	1	0
1	18	00	Recovered Data With LDPC	0	1	0	1	0	0	0	1	1	1	1	0	1	1	1	0
1	18	01	Recovered Data - Forced Channel Fault	0	1	0	1	0	0	0	1	1	1	1	0	1	1	1	0
1	18	02	Recovered Data - Data Auto-Reallocated	0	1	0	1	0	0	0	1	1	1	1	0	1	1	1	0
1	18	05	Recovered Data - Recommend Reassignment	0	1	0	1	0	0	0	1	1	1	1	0	1	1	1	0
1	18	06	Recovered Data With LDPC - Recommend Rewrite	0	1	0	1	0	0	0	1	1	1	1	0	1	1	1	0

Key	Code	Qual	Description	Status Field								Error Field							
				BSY	RDY	DF	NA	REQ	ALG	SDA	ERR	CRC	UNC	OBS	IDN	OBS	ABT	OBS	CCT
1	18	07	Recovered Data With LDPC - Data Rewritten	0	1	0	1	0	0	0	1	1	1	1	0	1	1	1	0
1	1C	00	Defect List Format Not Supported	0	1	0	1	0	0	0	1	1	1	1	0	1	1	1	0
1	1C	01	Primary Defect List Not Found. Requested Format Not Supported	0	1	0	1	0	0	0	1	1	1	1	0	1	1	1	0
1	1C	02	Grown Defect List Not Found. Requested Format Not Supported	0	1	0	1	0	0	0	1	1	1	1	0	1	1	1	0
1	1F	00	Partial Defect List Transfer	0	1	0	1	0	0	0	1	1	1	1	0	1	1	1	0
1	40	80	Primary Flash Not ready	0	1	0	1	0	0	0	0	0	0	0	0	0	0	0	0
1	44	00	Internal Target Failure	0	v	v	v	0	0	0	v	v	v	v	0	v	v	v	v
1	44	0B	Vendor Unique - Internal Target Failure	0	1	0	1	0	0	0	1	1	1	1	0	1	1	1	0
1	44	F9	Vendor Unique - Internal Target Failure	0	1	0	1	0	0	0	1	1	1	1	0	1	1	1	0
1	45	00	Helium leak alert	0	1	0	1	0	0	0	1	0	0	0	0	0	1	0	0
1	5D	00	NVC Non Meta Data Error	0	1	0	0	0	0	0	1	0	1	0	0	0	0	0	0
1	5D	01	Self Test Error	0	1	0	1	0	0	0	1	1	1	1	0	1	1	1	0
1	5D	14	Self Test GLIST Error Threshold Reached	0	1	0	1	0	0	0	1	1	1	1	0	1	1	1	0
1	5D	20	Self Test Servo Error Threshold Reached	0	1	0	1	0	0	0	1	1	1	1	0	1	1	1	0
2	04	00	Logical Unit Not Ready - Start Spindle Motor Fail	0	1	0	1	0	0	0	1	0	0	0	0	0	1	0	0
2	04	01	Logical Unit Is In The Process of Becoming Ready	0	1	0	1	0	0	0	1	0	0	0	0	0	1	0	0
2	04	02	Logical Unit Not Ready, initializing command required	0	1	0	1	0	0	0	1	0	0	0	0	0	1	0	0
2	04	03	Logical Unit Not Ready, Manual Intervention Required	0	1	0	1	0	0	0	1	0	0	0	0	0	1	0	0
2	04	04	Logical Unit Not Ready, Format In Progress	0	1	0	1	0	0	0	1	0	0	0	0	0	1	0	0
2	04	09	Not Ready - Self-test In Progress	0	1	0	1	0	0	0	1	0	0	0	0	0	1	0	0
2	04	0A	Not Ready - In Hitachi DST	0	1	0	1	0	0	0	1	0	0	0	0	0	1	0	0
2	04	0E	Not Ready - Session opened	0	1	0	1	0	0	0	1	0	0	0	0	0	1	0	0
2	04	11	Not Ready - Notify (Enable Spin-up) Required	0	1	0	1	0	0	0	0	0	0	0	0	0	0	0	0
2	04	1B	Host Interface Not Ready - Sanitize In Progress	0	1	0	1	0	0	0	1	0	0	0	0	0	1	0	0
2	04	1C	Not Ready - Power Grant Required	0	1	0	1	0	0	0	0	0	0	0	0	0	0	0	0
2	04	1E	Not Ready - Microcode Activation Required	0	1	0	1	0	0	0	1	0	0	0	0	0	1	0	0
2	04	1F	Not Ready – Diagnostics in Progress	0	1	0	1	0	0	0	1	0	0	0	0	0	1	0	0
2	04	24	Not Ready - Depopulation in progress	0	1	0	1	0	0	0	1	0	0	0	0	0	1	0	0
2	04	25	Not Ready – Depopulation restoration in progress	0	1	0	1	0	0	0	1	0	0	0	0	0	1	0	0
2	04	F0	Vendor Unique - Logical Unit Not Ready	0	1	0	1	0	0	0	1	0	0	0	0	0	1	0	0
2	31	00	Medium Format Corrupted - Reassign Failed	0	1	0	1	0	0	0	1	0	0	0	0	0	1	0	0

Key	Code	Qual	Description	Status Field								Error Field							
				BSY	RDY	DF	NA	REQ	ALG	SDA	ERR	CRC	UNC	OBS	IDN	OBS	ABT	OBS	CCT
2	31	01	Format Command Failed	0	1	0	1	0	0	0	1	0	0	0	0	0	1	0	0
3	03	00	Medium Error - Write Fault	0	1	0	1	0	0	0	1	0	0	0	1	0	0	0	0
3	0C	FF	Unrecovered Write OCT Error	0	1	0	1	0	0	0	1	0	1	0	0	0	0	0	0
3	11	00	Unrecovered Read Error	0	1	0	1	0	0	0	1	0	v	0	v	0	0	0	0
3	11	14	Unrecovered LBA Error	0	1	0	1	0	0	0	1	0	1	0	0	0	0	0	0
3	11	FF	Unrecovered Read OCT Error	0	1	0	1	0	0	0	1	0	1	0	0	0	0	0	0
3	15	00	Random Positioning Error	0	1	0	1	0	0	0	1	0	v	0	v	0	0	0	0
3	15	03	Unrecovered Sector Error	0	1	0	1	0	0	0	1	0	0	0	1	0	0	0	0
3	16	00	Data Synchronization Mark Error	0	1	0	1	0	0	0	1	0	1	0	0	0	0	0	0
3	19	02	Defect List Error in Primary List	0	1	0	1	0	0	0	1	0	0	0	1	0	0	0	0
3	19	03	Defect List Error in Grown List	0	1	0	1	0	0	0	1	0	0	0	1	0	0	0	0
3	31	00	Medium Format Corrupted Reassign Failed	0	v	0	v	0	0	0	v	0	v	0	0	0	0	0	0
3	31	01	Indirection System Failure	0	1	0	1	0	0	0	1	0	v	0	v	0	0	0	0
3	31	03	Sanitize Command failed	0	1	0	1	0	0	0	1	0	0	0	0	0	1	0	0
3	31	04	Medium Error Depopulation failed	0	1	0	1	0	0	0	1	0	0	0	0	0	1	0	0
3	31	05	Medium Error Depopulation Restoration failed	0	1	0	1	0	0	0	1	0	0	0	0	0	1	0	0
3	40	00	Unrecovered SAT No Buffer Overflow Error	0	1	0	1	0	0	0	1	0	1	0	0	0	0	0	0
3	40	01	Unrecovered SAT Buffer Overflow Error	0	1	0	1	0	0	0	1	0	1	0	0	0	0	0	0
3	40	02	Unrecovered SAT No Buffer Overflow With ECS Fault	0	1	0	1	0	0	0	1	0	1	0	0	0	0	0	0
3	40	03	Unrecovered SAT Buffer Overflow With ECS Fault	0	1	0	1	0	0	0	1	0	1	0	0	0	0	0	0
4	40	80	Diagnostic Failure	0	1	0	1	0	0	0	v	0	0	0	0	0	v	v	v
3	40	FF	No Buffer Overflow Reset Error	0	1	0	1	0	0	0	1	0	1	0	0	0	0	0	0
3	44	00	Read Error Recovery Timeout	0	1	0	1	0	0	0	1	0	1	0	0	0	0	0	0
3	81	00	Vendor Unique - Internal Logic Error	0	1	0	1	0	0	0	1	0	0	0	1	0	0	0	0
3	5D	01	Self Test Unrecoverable Error Threshold Exceeded	0	1	0	1	0	0	0	1	0	0	0	0	0	1	0	0
4	02	00	No Seek Complete	0	1	0	1	0	0	0	1	0	0	0	1	0	0	0	0
4	09	00	Track Following Error	0	1	0	1	0	0	0	1	0	0	0	1	0	0	0	0
4	31	00	Medium Format Corrupted - Reassign Failed	0	1	0	1	0	0	0	1	0	1	0	0	0	0	0	0
4	32	00	No Defect Spare Location Available	0	1	0	1	0	0	0	1	0	1	0	0	0	0	0	0
4	3E	03	Self-test Failed	0	1	0	1	0	0	0	1	0	v	0	v	0	v	0	0
4	3E	04	Unrecovered Self-Test Hard-Cache Test Fail	0	1	0	1	0	0	0	1	0	1	0	0	0	0	0	0
4	3E	05	Unrecovered Self-Test OTF-Cache Fail	0	1	0	1	0	0	0	1	0	1	0	0	0	0	0	0
4	44	00	Internal Target Failure	v	v	v	v	0	0	v	v	v	v	v	v	v	v	v	v
4	40	81	DRAM Failure	0	1	0	1	0	0	0	1	0	0	0	0	0	1	0	0
4	40	90	Diagnostic Failure	0	1	0	1	0	0	0	1	0	0	0	0	0	1	0	0
4	40	91	Diagnostic Failure	0	1	0	1	0	0	0	1	0	0	0	0	0	1	0	0

Key	Code	Qual	Description	Status Field								Error Field							
				BSY	RDY	DF	NA	REQ	ALG	SDA	ERR	CRC	UNC	OBS	IDN	OBS	ABT	OBS	CCT
4	40	A0	Diagnostic Failure	0	1	0	1	0	0	0	1	0	0	0	0	0	1	0	0
4	40	FF	Processor Start Failure	0	0	0	0	0	0	0	0	0	0	0	0	0	0	0	0
4	44	0B	Vendor Unique - Internal Target Failure	0	1	0	1	0	0	0	1	0	0	0	1	0	0	0	0
4	44	F2	Vendor Unique - Internal Target Failure	0	1	0	1	0	0	0	1	0	0	0	0	0	1	0	0
4	44	F6	Vendor Unique - Internal Target Failure	0	1	0	1	0	0	0	1	0	0	0	0	0	1	0	0
4	44	F7	Vendor Unique - Internal Target Failure	0	1	0	1	0	0	0	0	0	0	0	0	0	0	0	0
4	44	F9	Vendor Unique - Internal Target Failure	0	1	0	1	0	0	0	1	0	0	0	1	0	0	0	0
4	44	FA	Vendor Unique - Internal Target Failure	0	1	0	1	0	0	0	1	0	0	0	1	0	0	0	0
4	44	FF	Vendor Unique - Internal Target Failure	0	v	0	v	0	0	0	v	0	0	0	0	0	v	0	0
4	5D	01	Self Test Command Timeout Error Count Threshold Exceeded	0	1	0	1	0	0	0	1	0	0	0	0	0	1	0	0
4	81	00	Vendor Unique - Internal Logic Error	0	1	0	1	0	0	0	1	0	0	0	0	0	1	0	0
4	85	00	Vendor Unique - Internal Key Seed Error	0	1	0	1	0	0	0	1	v	1	v	0	v	v	v	0
5	00	16	Operation in Progress	0	1	0	1	0	0	0	1	0	0	0	0	0	1	0	0
5	1A	00	Parameter List Length Error	0	1	0	1	0	0	0	1	0	0	0	0	0	1	0	0
5	20	00	Invalid Command Operation Code	0	1	0	1	0	0	0	1	0	0	0	0	0	v	0	0
5	20	02	Drive Locked	0	1	0	1	0	0	0	1	0	0	0	0	0	1	0	0
5	20	F3	Invalid Skip Value	0	1	0	1	0	0	0	1	0	0	0	0	0	1	0	0
5	21	00	Logical Block Address out of Range	0	1	0	1	0	0	0	1	0	0	0	1	0	0	0	0
5	21	04	Write Pointer Violation	0	1	0	1	0	0	0	1	0	0	0	0	0	1	0	0
5	21	05	Write Boundary Violation	0	1	0	1	0	0	0	1	0	0	0	0	0	1	0	0
5	21	06	Attempted to Read Invalid Data	0	1	0	1	0	0	0	1	0	0	0	0	0	1	0	0
5	21	07	Read Boundary Violation	0	1	0	1	0	0	0	1	0	0	0	0	0	1	0	0
5	22	00	Unsafe Format	0	1	0	1	0	0	0	1	0	0	0	0	0	1	0	0
5	24	00	Invalid Field in CDB	0	1	0	1	0	v	0	1	0	0	0	0	0	1	0	0
5	24	09	Invalid Sector Configuration	0	1	0	1	0	0	0	1	0	0	0	0	0	1	0	0
5	24	F2	Mask Length Mismatch	0	1	0	1	0	0	0	1	0	0	0	0	0	1	0	0
5	24	F3	Vendor Unique - Illegal Request	0	1	0	1	0	0	0	1	0	0	0	0	0	1	0	0
5	25	00	Logical Unit Not Supported	0	1	0	1	0	0	0	1	0	0	0	0	0	1	0	0
5	26	00	Invalid Field in Parameter List	0	1	0	1	0	0	0	1	0	0	0	v	0	v	0	0
5	26	01	Command Param Not Support	0	1	0	1	0	0	0	1	0	0	0	0	0	1	0	0
5	26	02	Parameter Value Invalid	0	1	0	1	0	0	0	1	0	0	0	0	0	1	0	0
5	26	04	Invalid Release of Active Persistent Reservation	0	1	0	1	0	0	0	1	0	0	0	0	0	1	0	0
5	26	06	Command Too Many Target Descriptors	0	1	0	1	0	0	0	1	0	0	0	0	0	1	0	0
5	26	07	Command Unsupported TARG DESC Type Code	0	1	0	1	0	0	0	1	0	0	0	0	0	1	0	0
5	26	08	Command Too Many Segment Descriptors	0	1	0	1	0	0	0	1	0	0	0	0	0	1	0	0
5	2A	03	Reservation Conflict	0	1	0	1	0	0	0	1	0	0	0	0	0	1	0	0
5	2C	00	Illegal Request Sequence Error	0	1	0	1	0	0	0	1	0	0	0	0	0	1	0	0

Key	Code	Qual	Description	Status Field								Error Field							
				BSY	RDY	DF	NA	REQ	ALG	SDA	ERR	CRC	UNC	OBS	IDN	OBS	ABT	OBS	CCT
5	49	00	Invalid Message Error	0	1	0	1	0	0	0	1	0	0	0	0	0	1	0	0
5	55	04	Insufficient Registration Resources	0	1	0	1	0	0	0	1	0	0	0	0	0	1	0	0
6	28	00	Not Ready To Ready Transition (Format completed)	0	1	0	1	0	0	0	0	0	0	0	0	0	0	0	0
6	29	01	Unit Attention - POR Occurred	0	1	0	1	0	0	0	0	0	0	0	0	0	0	0	0
6	29	02	Unit Attention - Bus Reset Occurred	0	1	0	1	0	0	0	0	0	0	0	0	0	0	0	0
6	29	03	Unit Attention - Bus Device Reset Occurred	0	1	0	1	0	0	0	0	0	0	0	0	0	0	0	0
6	29	04	Unit Attention - Self Initiated Reset Occurred	0	1	0	1	0	0	0	0	0	0	0	0	0	0	0	0
6	29	07	I_T Nexus Loss Occurred	0	1	0	1	0	0	0	0	0	0	0	0	0	0	0	0
6	2A	01	Mode Parameters Changed	0	1	0	1	0	0	0	0	0	0	0	0	0	0	0	0
6	2A	02	Log Parameters Changed	0	1	0	1	0	0	0	0	0	0	0	0	0	0	0	0
6	2A	03	Reservations Preempted	0	1	0	1	0	0	0	0	0	0	0	0	0	0	0	0
6	2A	04	Reservations Released	0	1	0	1	0	0	0	0	0	0	0	0	0	0	0	0
6	2A	05	Registrations Released	0	1	0	1	0	0	0	0	0	0	0	0	0	0	0	0
6	2A	09	Capacity Data Changed	0	1	0	1	0	0	0	0	0	0	0	0	0	0	0	0
6	2A	10	Timestamp Changed	0	1	0	1	0	0	0	0	0	0	0	0	0	0	0	0
6	2F	00	Commands Cleared by Another Initiator	0	1	0	1	0	0	0	0	0	0	0	0	0	0	0	0
6	2F	01	Commands Cleared by Power Loss Notification	0	1	0	1	0	0	0	1	0	0	0	0	0	1	0	0
6	3F	01	Microcode has been changed	0	1	0	1	0	0	0	0	0	0	0	0	0	0	0	0
6	3F	02	Primary FW image is degraded - booting from secondary	0	1	0	1	0	0	0	0	0	0	0	0	0	0	0	0
6	3F	03	Inquiry Parameters Changed	0	1	0	1	0	0	0	0	0	0	0	0	0	0	0	0
6	3F	05	Device Identifier Changed	0	1	0	1	0	0	0	0	0	0	0	0	0	0	0	0
7	20	02	Access Denied	0	1	0	1	0	0	0	1	0	v	0	0	0	v	0	0
7	27	08	Zone Is Read Only	0	1	0	1	0	0	0	1	0	0	0	0	0	1	0	0
7	2C	0E	Zone Is Offline	0	1	0	1	0	0	0	1	0	0	0	0	0	1	0	0
7	2C	12	Zone Is Inactive	0	1	0	1	0	0	0	1	0	0	0	0	0	1	0	0
7	55	0E	Insufficient Zone Resources	0	1	0	1	0	0	0	1	0	0	0	0	0	1	0	0
9	ED	00	Dataeye Physical Layer Test Failure	0	1	0	1	0	0	0	1	0	0	0	0	0	1	0	0
9	EE	00	Dataeye Physical Layer Test Interrupted	0	1	0	1	0	0	0	1	0	0	0	0	0	1	0	0
B	00	00	Internal Error	0	1	0	1	0	0	0	1	0	0	0	0	0	1	0	0
B	0C	0E	Media Multiple WRITE Error	0	1	0	1	0	0	0	1	0	0	0	1	0	0	0	0
B	0E	01	Information Unit Too Short	0	1	0	1	0	0	0	1	1	0	0	0	0	1	0	0
B	0E	02	Information Unit Too Long	0	1	0	1	0	0	0	1	1	0	0	0	0	1	0	0
B	10	00	Aborted Command - End-to-End T10 Error	0	1	0	1	0	0	0	1	0	1	0	0	0	0	0	0
B	10	01	Aborted Command - End-to-End Guard Check	0	1	0	1	0	0	0	1	0	1	0	0	0	0	0	0
B	10	02	Aborted Command - End-to-End Application Tag Check	0	1	0	1	0	0	0	1	0	1	0	0	0	0	0	0

Key	Code	Qual	Description	Status Field								Error Field							
				BSY	RDY	DF	NA	REQ	ALG	SDA	ERR	CRC	UNC	OBS	IDN	OBS	ABT	OBS	CCT
B	10	03	Aborted Command - End-to-End Reference Tag Check	0	1	0	1	0	0	0	1	0	1	0	0	0	0	0	0
B	11	03	Aborted Command - OCT Timeout In Recovery	0	1	0	1	0	0	0	1	0	0	0	1	0	0	0	0
B	26	00	Write/Erase/Read Parameter Error	0	1	0	1	0	0	0	1	0	0	0	0	0	1	0	0
B	2E	00	Write/Erase/Read Parameter Retry Error	0	1	0	1	0	0	0	1	0	0	0	0	0	1	0	0
B	2E	02	SCT Read or Write Timeout	0	1	0	1	0	0	0	1	0	0	0	0	0	1	0	0
B	3F	0F	Aborted Command - Echo Buffer Overwritten	0	1	0	1	0	0	0	1	0	0	0	0	0	1	0	0
B	44	00	Internal Target Failure	0	1	v	1	0	0	0	1	v	v	0	v	0	v	0	0
B	47	01	Data Phase CRC Error	0	1	0	1	0	0	0	1	1	0	0	0	0	1	0	0
B	4B	00	Data Phase Error	0	1	0	1	0	0	0	1	1	0	0	0	0	1	0	0
B	4B	02	Too Much Write Data	0	1	0	1	0	0	0	1	1	0	0	0	0	1	0	0
B	4B	03	ACK/NAK Timeout	0	1	0	1	0	0	0	1	1	0	0	0	0	1	0	0
B	4B	04	NAK Received	0	1	0	1	0	0	0	1	1	0	0	0	0	1	0	0
B	4B	05	Data Offset Error	0	1	0	1	0	0	0	1	1	0	0	0	0	1	0	0
B	4B	06	Initiator Response Timeout	0	1	0	1	0	0	0	1	0	0	0	0	0	1	0	0
B	4B	FF	Internal Host forced	0	1	0	1	0	0	0	1	1	0	0	0	0	1	0	0
B	4C	00	Password Failure	0	1	0	1	0	0	0	1	0	0	0	0	0	1	0	0
B	4E	00	Overlapped Commands Attempted	0	1	0	1	0	0	0	1	0	0	0	0	0	1	0	0
B	4F	00	Command Aborted Due To OOB	0	0	0	0	0	0	0	0	0	0	0	0	0	0	0	0
B	55	00	Failed to reserve MFG slots	0	1	0	1	0	0	0	1	0	0	0	0	0	1	0	0
E	1D	00	Miscompare During Verify Operation	0	1	0	1	0	0	0	1	0	1	0	0	0	0	0	0